INTEGRAL SKILLS

OPERATE ELEVATING WORK PLATFORMS

TLILIC0005 Licence to operate a boom-type elevating work platform (boom length 11 metres or more)
RIIHAN301E Operate elevating work platform
CPCCCM3001 Operate elevated work platforms up to 11 metres

LEARNER GUIDE

www.integralskills.com.au

INTENTIONALLY BLANK

MODIFICATION HISTORY

Version	Date	Nature of Amendment
1	7 Feb 19	Creation
2	28 Nov 19	Update to information
3	31 Mar 20	Added extra units of competency – RIIHAN301E & CPCCCM3001
4	12 Jul 23	Update to information
5	19 Mar 24	QR Code added to the cover page

TABLE OF CONTENTS

INTRODUCTION 7
LICENSING/REGULATORY INFORMATION 7
PERFORMANCE EVIDENCE – TLILIC0005 7
KNOWLEDGE EVIDENCE – TLILIC0005 11
ASSESSMENT CONDITIONS – TLILIC005 13
HIGH RISK WORK LICENCE REQUIREMENTS 14
WHAT IS A BOOM-TYPE ELEVATING WORK PLATFORM (EWP) 15
PLAN WORK/TASK 18
COMPLIANCE DOCUMENTATION 18
ENVIRONMENTAL PROTECTION REQUIREMENTS 22
REVIEW TECHNICAL INFORMATION BEFORE YOU START 23
GROUND CONDITIONS 23
SELECTING THE CORRECT EWP FOR THE TASK 24
FORCES AND LOADS 25
RATED CAPACITY 26
INENTIFY AND MANAGE HAZARDS 28
WORKING NEAR ELECTRICITY/POWERLINES 30
RISK MANAGEMENT 34
PRE—WORK HAZARD ASSESSMENT E.G. SWMS/JSEA'S ETC 34
RISK/HAZARD TREATMENT 37
SAFE WORK PRACTICES 38
APPLY CONTROL MEASURES 39
REPORTING AND RECORD KEEPING 41
COMMUNICATION METHODS 41
WORK/TASK PLANNING CONFIRMATION 43
PREPARE FOR WORK/TASK 43
ACCESSING EWP 43
PRE-START INSPECTION 44
START UP ROCEDURE 51

OPERATIONAL CHECKS 52
FROM GROUND CONTROL PANEL 52
FROM THE PLATFROM CONTROL STATION 55
SET UP EWP 58
SETTING UP AND STABILISING THE EWP 61
PERFORM WORK/TASK 65
CHECK HAZARD CONTROL MEASURES 65
TOOLS AND EQUIPMENT 66
OPERATING ON SITE 66
POSITION OF LEAST FORWARD STABILITY 67
POSITION OF LEAST BACKWARD STABILITY 67
WORKING IN THE EWP 69
RAISING THE EWP 70
EMERGENCY PROCEDURES 72
EMERGENCY DESCENT 73
ON BOARD FIRE 78
CONTACT WITH POWERLINES 79
COLLAPSE OF PERSONNEL IN THE BASKET 81
EWP STARTS TO TILT TO ONE SIDE 81
MOTOR CUTS OUT 82
ABNORMAL NOISES AND MOVEMENTS 82
WARNING LIGHTS, CUT-OUTS AND ALARMS 82
PLATFORM DROPS, MOVES OR TILTS 83
EWP RECOVERY 83
PARKING EWP 84
POST OPERATIONAL CHECKS 85
PACK UP 86

INTENTIONALLY BLANK

INTRODUCTION

This Assessment Package outlines the requirements for the assessment of the units of competency below.

Code	Title	Training Package
TLILIC0005	Licence to operate a boom-type elevating work platform (boom length 11 metres or more)	TLI10 Transport and Logistics
RIIHAN301E	Operate elevating work platform	RII Resources and Infrastructure industry
CPCCCM3001	Operate elevated work platforms up to 11 metres	CPC Construction, Plumbing and Services

This training package uses the units of competency as the benchmark for assessments.

The units requires a person operating a EWP to:

- Plan for the work/task.
- Prepare for the work/task.
- Perform work/task.
- Pack up.

LICENSING/REGULATORY INFORMATION

Legislative and regulatory requirements are applicable to this unit of competency. This unit is based on the licensing requirements of Part 4.5 of the Model Work Health and Safety (WHS) Regulations and meets Commonwealth, State and Territory HRWL requirements.

The National Assessment Instrument (NAI) is the mandated assessment for the HRWL to operate the relevant licencing class as detailed in this unit.

PERFORMANCE EVIDENCE – TLILIC0005

Evidence required to demonstrate competence in this unit must be relevant to and satisfy all the requirements of the elements and performance criteria on at least one occasion and include:

- Advising relevant person/s on site in relation to the risk hazard prevention/control strategies.
- Applying safe operating and best mobiling practice and procedures for an Elevating Work Platform (EWP) including all functions within the safe working rated capacity including:
    - boom/s as low as possible and fully retracted whilst travelling
    - boom/s in line with EWP where practical whilst travelling

  - EWP stability
  - gently accelerating and braking to minimise boom/s swing
  - maintaining safe operating speed in relation to the work condition
  - travelling with work platform raised to an appropriate height for the terrain and visibility in relation to direction of travel
- Applying emergency procedures.
- Applying traffic management plan procedures relevant to their role in the work area.
- Carrying out pre-start checks, including visual inspection which must include:
  - battery fluid level as required by manufacturer requirements
  - checking compliance plate is relevant to the load/s being used on the EWP
  - engine/mechanical fluid level checks as required by manufacturer requirements
  - ensuring availability of correct logbook and updating records as required
  - ensuring EWP platform and attachment/s fitted in platform are secured
  - evidence of damage
  - fluid leaks
  - lights are working effectively (where fitted)
  - safety and emergency equipment and devices checks / power connected
  - signage and labels to ensure they are visible and legible
  - structural weaknesses including paint separation or stressed welds
  - wheels and tyres for damage/correct inflation if applicable
- Carrying out operational checks on EWP including:
  - testing of all EWP safety devices
  - all controls are located, identified and tested for functionality from the base controls and platform controls
  - hazard warning systems including travel beepers and lights are functional
  - start-up is in accordance with manufacturer requirements
  - steering, transmission and brake functions comply with operating requirements
  - there are no unusual noises
- Checking compliance plate and load chart for reach requirements and load suitability.
- Controlling and operating a boom type elevating work platform ensuring movements and control functions are safe, smooth and comply with operating requirements including:
  - any combination of the movement of the extending structures used to support a platform on which personnel, equipment and materials are elevated to perform the work task/s
  - avoidance of ground depressions

- correctly using observer guidance of work platform, main chassis and extending structure
- demonstrating best mobiling practice driving an EWP in forward and reverse, while maintaining visibility
- driving applicable to conditions and moving platform and load/s safely
- ensuring warning devices are functioning correctly
- interpreting directional arrows correctly on platform controls during forward, reverse, left and right
- lowering boom to its resting position
- monitoring platform, main chassis and extending structure movement constantly ensuring safe work procedures are followed
- raising platform and slewing within manufacturer requirements
- raising platform to a minimum height of 11 metres or 75% of the maximum height capacity (whichever is greater)
- stability of the EWP and the work platform
- telescoping in and out and positioning platform to perform work task/s safely whilst at a minimum height of 75% of the maximum capacity

- Conducting and applying risk/hazard assessment strategies including:
  - barricades and controls to prevent the risk of collision with people, moving vehicles and fixed structures
  - disconnected power
  - environmental conditions including:
    - wind
    - lightning
    - water impacted ground
    - rain
    - extreme heat
    - Ultra Violet (UV) exposure
  - ground conditions (surface and slopes) and assessing work area operating surface suitability based on machine and task requirements
  - insulated electric lines
  - overhead hazards including electric lines and service pipes
  - personal protective equipment (PPE)
  - restricted areas and crush points from work platform and external surroundings
  - safety related tags on electrical switches/isolators that have an impact on point of work of EWP operator
  - sufficient lighting
  - suitable area for set-up, positioning and safely operating EWP

    - suitable firm and stable operating surface
    - use of safety observer when visibility is restricted
- Clarifying work plan and checking understanding.
- Complying with Commonwealth, State and Territory Work Health and Safety (WHS)/Occupational Health and Safety (OHS)/Occupational Safety and Health (OSH) legislation and regulations.
- Inspecting and using relevant safety equipment, including:
    - anchor point/s
    - emergency retrieval system from base controls and platform controls where fitted
    - energy absorber/s
    - lanyard/s
    - safety harness/es
- Identifying, isolating and tagging out defective equipment and reporting to authorised person/s.
- Interpreting and confirming relevant documentation, workplace instructions, safety information and emergency procedures for the work task and relevant area.
- Interpreting workplace procedures in relation to various work environmental conditions.
- Maintaining communication with other workplace personnel using appropriate workplace procedures including procedures to ensure all movements are conveyed clearly and succinctly including:
    - 2-way radio
    - audible and visual warning devices
    - making and interpreting hand signals
    - questioning to confirm understanding
    - signage
    - written instructions
- Entering work platform correctly including:
    - lowering platform safely and stably to appropriate height to access safely
    - unclipping of fall restraint/arrest device
    - maintaining three points of contact whilst accessing platform
- Exiting work platform correctly including:
    - lowering platform safely and stably to appropriate height to egress safely
    - unclipping of fall restraint/arrest device
    - exiting platform maintaining three points of contact
- Recording and maintaining accurate information relating to EWP operations.

- Using and interpreting EWP manufacturer requirements and data, including compliance plate and load chart, to enable correct EWP selection for task including:
    - boom/s
    - jib
    - platform
    - weight including:
        - outrigger load or wheel load
- Reporting to relevant person/s on site risk control measures that are not in place or deficient.
- Stabilising procedures for an EWP including:
    - checking levels
    - removing obstacles and obstructions
    - deploying and retracting outriggers
    - establishing correct size plates for packing (if required)
- Shutting down a boom type EWP in accordance with manufacturer requirements and workplace procedures.

KNOWLEDGE EVIDENCE – TLILIC0005

Evidence required to demonstrate competence in this unit must be relevant to and satisfy all of the requirements of the elements and performance criteria and include knowledge of:

- Australian and industry standards, codes of practice and guidelines to safely operate an EWP (boom length 11 metres or more) including:
    - nominal reach, measured horizontally from centre point of rotation to outer edge of platform in its most extended position
    - vertical distance from floor of platform to surface supporting elevating work platform with platform at its maximum height
- Appropriate mathematical calculations to estimate loads ensuring EWP is not overloaded.
- Appropriate worksite communication procedures including:
    - 2-way radio
    - audible and visual warning devices
    - questioning techniques
    - signage
    - hand signals
    - traffic warning systems
    - written instructions
- Compliance with permit condition requirements including:
    - from electrical supply authority
    - if operating on roads or footpaths
- EWP characteristics and capabilities, manufacturer requirements and instructions.

- Hazards including:
  - all ground and /or operating surface hazards
  - traffic including pedestrians, vehicles, other mobile plant and building structures
  - overhead hazards including electric lines, service pipes, doorways, roof beams, and lights
  - obstacles or obstructions
  - insufficient lighting
  - other relevant hazards
- Impact of the following on the operation of the EWP including:
  - failure/loss of control including brakes and steering
  - failure of equipment including hydraulic system
  - EWP and platform instability due to:
    - deterioration of ground/operating surface condition
    - gradient of operating surface
    - overloading
    - poor load placement
    - irregular loads
- Emergency procedures and safety equipment, including the use of:
  - safety harness/es
  - energy absorbers
  - lanyard/s
  - anchor point/s
  - emergency retrieval systems
- Identification and avoidance of person/s potential crush or entrapment points.
- Identification and avoidance of potential contact with overhead electrical conductors.
- Identification and avoidance of potential contact with structures near work platform/boom or chassis.
- Relevant manufacturer requirements and instructions.
- Problems, and appropriate response procedures to unplanned and/or unsafe environmental conditions.
- Relevant procedures for refuelling/recharging EWP using appropriate PPE.
- Procedures for recording, reporting and maintaining workplace records and information.
- Risk assessment process including hierarchy of control:
  - elimination
  - substitution
  - isolation
  - engineering controls
  - administrative controls
  - personal protective equipment (PPE)

- Procedures for shutting down a boom type EWP in accordance with manufacturer requirements.
- Problems and equipment faults, and implementing appropriate response procedures to unplanned and/or unsafe situations.
- Relevant documentation requirements.
- Suitability and lifting capability of the EWP to be used.
- Lock out and tag out procedures.
- Traffic management plan procedures and requirements.
- Typical routine problems encountered operating a EWP and adjustments required for correction.
- Wind speed factors that affect stability of EWP as per manufacturer requirements.
- Work plan which may be verbal, documented/written, or electronically generated.
- Work area operating surface suitability including issues with:
    - backfilled ground
    - bitumen (damaged, cracked)
    - concrete (damaged, cracked)
    - hard compacted soil
    - potholes
    - railway tracks
    - rough uneven or difficult terrain including sloping surfaces, uneven surfaces, steel decks and grates
    - soft soils
    - trench covers
- Work Health and Safety (WHS)/Occupational Health and Safety (OHS)/Occupational Safety and Health (OSH) and codes of practice requirements for boom type elevating work platforms.

ASSESSMENT CONDITIONS – TLILIC005

As a minimum, assessors must satisfy applicable regulatory requirements, which include requirements in the Standards for Registered Training Organisations current at the time of assessment.

As a minimum, assessment must satisfy applicable regulatory requirements, which include requirements in the Standards for Registered Training Organisations current at the time of assessment.

Assessment processes and techniques must be appropriate to the language, literacy and numeracy requirements of the work being performed and the needs of the candidate.
Assessment must occur in workplace operational situations. Where this is not appropriate, assessment must occur in simulated workplace operational situations that reflect workplace conditions.

- Simulators must not be used in the assessment of this unit of competency.

Resources for assessment must include access to:

- Appropriate boom-type elevating work platform (boom length 11 metres or more) in a safe/serviceable condition in accordance with manufacturer requirements.
- Relevant and appropriate materials, tools, equipment and personal protective Equipment currently used in industry.
- applicable documentation including:
    - approved codes of practice and guidance material
    - relevant Australian technical standards
    - manufacturer guidelines (instructions, requirements or checklists) for performance assessment
    - relevant industry standards and operating procedures (where applicable)
    - relevant workplace documentation.

HIGH RISK WORK LICENCE REQUIREMENTS

Any person who is undertaking training for a High Risk Work (HRW) licence according to the Work Health & Safety (WHS) Regulations must be currently enrolled in a course of HRW training and being supervised at the workplace by a person with a current HRW licence for the work.

The holder of a HRW licence is responsible for taking reasonable care and not adversely affecting the health and safety of other people while performing the HRW.

Once you pass your assessment you will have 60 days to apply for your licence. You must renew your licence within 12 months of its expiry otherwise:

- Your licence can't be renewed.
- You need to repeat the course and re-apply for your licence.
- You need to enrol in the course again and be supervised by somebody who has a current licence for the same class.

You can still do high risk work without a licence as long as:

- You are enrolled in a high risk course for the class, and
- You are being supervised by a person who has a HRW licence for the same class.

Any licensed worker must take reasonable steps to make sure the way they work does not impact on the safety of themselves or any other worker. This is their legal duty of care. Failing to work safely can result in the health and safety regulator:

- Suspending or cancelling your licence.
- Refusing to renew your licence.
- Ordering that you are reassessed to ensure you are competent.

Your employer might ask you for evidence that you have a high risk licence before you start any high risk work. You can show them:

- Your licence.
- Proof from the training company that you have passed your assessment.
- Proof that you are currently completing a course for high risk work.

WHAT IS A BOOM-TYPE ELEVATING WORK PLATFORM (EWP)

Boom-type elevating work platform means a telescoping device, hinged device, or articulated device, or any combination of these, used to support a platform on which personnel, equipment and materials may be elevated.

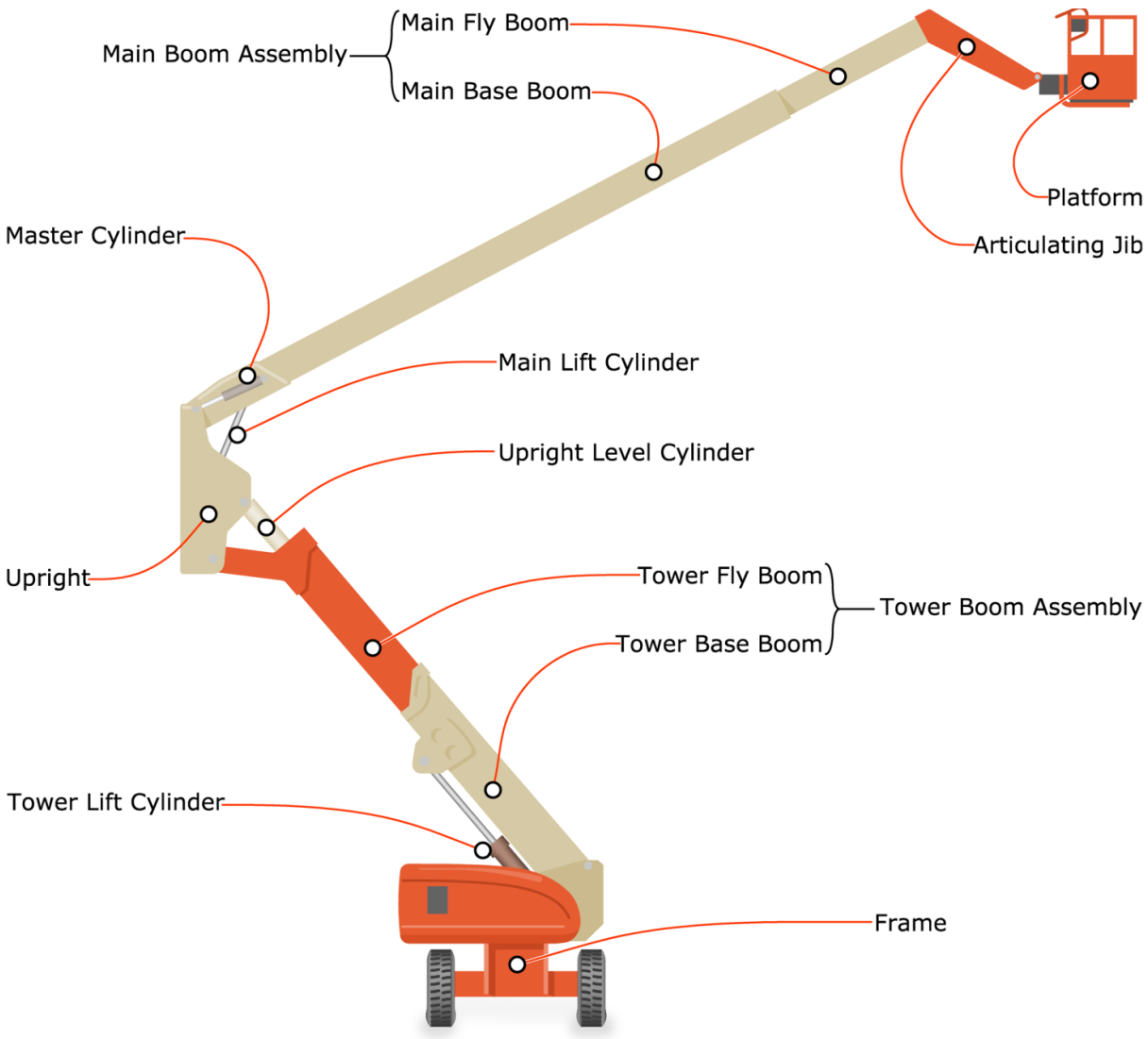

Figure 1 – Boom-Type Elevating Work Platform major components

Figure 2 – Boom-Type Elevating Work Platform – Right profile

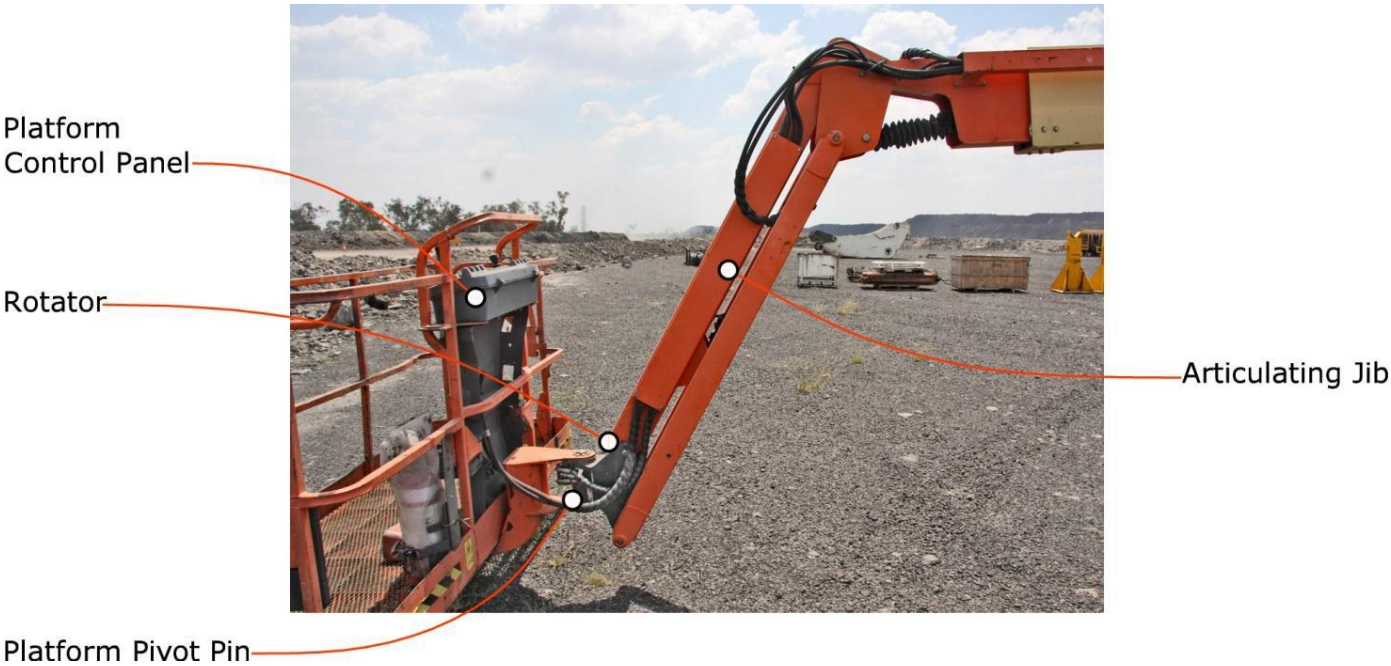

Figure 3 – Boom-Type Elevating Work Platform – Articulating Jib Platform

Figure 4 – Boom-Type Elevating Work Platform – Left profile

Figure 5 – Boom-Type Elevating Work Platform – Ground control panel example

<u>Note: The ground control panel is used for two purposes only: in an emergency, to lower the platform to the ground, should the operator in the platform be unable to do so and to perform pre-operational checks</u>.

PLAN WORK/TASK

It is important that you are aware of all the requirements relating to your work, before you start. Therefore to work safely we need to plan the work/task by taking into consideration:

- Any compliance documentation.
- Work orders/task.
- Inspecting the work area (layout, structures, equipment & environmental).
- Selection of appropriate equipment as per operational requirements.
- Identifying hazards/risks.
- Implementing hazard/risk treatments.
- Working in accordance with:
    - Procedures (site and equipment)
    - Regulations
    - Codes of practice
    - Australian Standards

If unsure about your work/task requirements you may need to consult with:

- Supervisor.
- Site Safety Officer.
- Manufacturer to ascertain limitations/specifications.

COMPLIANCE DOCUMENTATION

Before you begin your task ensure that you access the relevant documentation and plan your work. Part of this is identifying any compliance documentation.

Compliance documentation is essential to all aspects of operations on every worksite.
From work instructions through to quality and environmental requirements, compliance documentation sets out the what, when, how and who of everything that needs to be done in the safest, most effective way.

Interpretation of compliance documentation will allow you to make the right decisions for each situation or task. Interpretation means understanding what is required of you and how you are expected to perform the tasks.

Applying documentation involves following all instructions given by these documents at all times – they are designed to keep you safe.

Statements containing the words “must”, “shall” or “will” are often used within these documents to indicate that there are mandatory (legally must be applied) requirements.
Each project site will have different compliance documentation that must be referred to.

This may include:

- Legislative, organisation and site requirements and procedures.
- Occupational Health and Safety (OHS)/ Workplace Health and Safety (WHS) legislation, codes of practice and guidance material.
- Manufacturers' guidelines and specifications.
- Australian Standards.
- Codes of Practice.
- Equal Employment Opportunity and Disability Discrimination legislation.
- Licence and certification requirements.
- Internal permit control systems.
- Mechanical and electrical isolation processes.
- Company policy and permit control systems.

Compliance documentation may be provided by:

- WHS authorities and ASCC/NWHSC.
- Environment Protection Authority (EPA).
- Employment and workplace relations legislation.

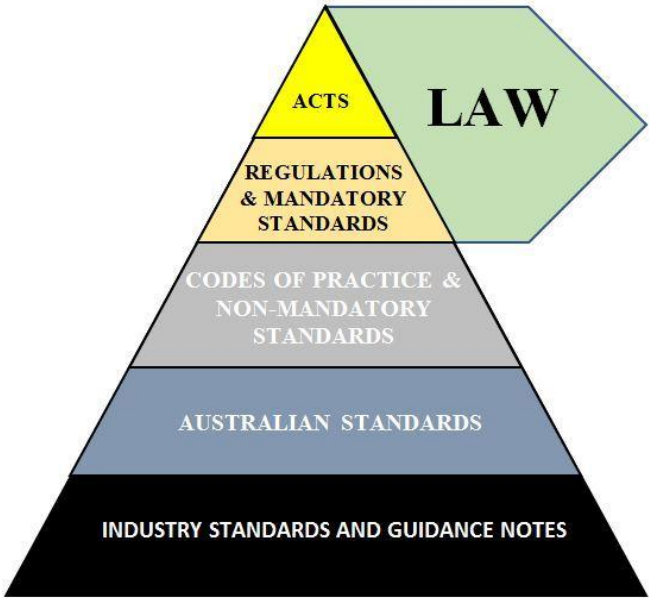

Figure 6 – Legislation Hierarchy

WHS Legislation and Regulations

Workplace Health and Safety (WHS) are laws and guidelines to help keep your workplace safe.

These can be broken down into four main types:

- Acts & Regulations.
- Codes of Practice.

- Australian Standards.
- Regulations.

Legislation/Acts	Acts of Parliament and laws to protect the health, safety and welfare of people at work. For example the Work Health and Safety Act (the WHS Act) 2011.
Regulations	More details or information on particular parts of the Act.
Codes of Practice/Compliance Codes	Practical instructions on how to meet the terms of the law. For example the Code of Practice "Managing the Risk of Falls in Workplaces".
Australian Standards	The minimum levels of performance or quality for a hazard, work process or product. For example AS/NZS 1891

Table 1 – Legislation Descriptions

Harmonisation of Workplace Health & Safety Legislation

In 2011, Safe Work Australia developed a single set of WHS laws to be implemented across Australia. These are known as 'model' laws. For the model WHS laws to become legally binding, the Commonwealth, states and territories must separately implement them as their own laws.

The model WHS laws include:

- The model WHS Act.
- The model WHS Regulations.
- Model Codes of Practice.

These elements are supported by the National compliance and enforcement policy, which sets out principles of how WHS regulators monitor and enforce compliance with their jurisdictions' WHS laws. WHS regulators in the Commonwealth and in each state and territory are responsible for regulating and enforcing the laws in their jurisdictions.

The model WHS laws have been implemented in the Australian Capital Territory, New South Wales, the Northern Territory, Queensland, South Australia, Tasmania and the Commonwealth. Some jurisdictions have made minor variations to make sure the legislation is consistent with their relevant drafting protocols and other laws and processes.

Model WHS Act

The Model WHS Act forms the basis of the WHS Acts that have been implemented in most jurisdictions across Australia.

The main object of the Act is to provide for a balanced and nationally consistent framework to secure the health and safety of workers and workplaces. It does this by:

- Protecting workers and other persons from harm by requiring duty holders to eliminate or minimise risk.
- Providing for fair and effective representation, consultation and cooperation.
- Encouraging unions and employer organisations to take a constructive role in promoting improvements in WHS practices.
- Promoting the provision of advice, information, education and training for WHS.
- Securing compliance with the Act through effective and appropriate compliance and enforcement measures.
- Ensuring appropriate scrutiny and review of actions taken by persons with powers or functions under the Act.
- Providing a framework for continuous improvement.
- Maintaining and strengthening national harmonisation of WHS laws and facilitating a consistent national approach to WHS.

Codes of Practice and Australian Standards

Model Codes of Practice are practical guides to achieving the standards of health and safety required under the model WHS Act and Regulations.

To have legal effect in a jurisdiction, a model Code of Practice must be approved as a code of practice there. To determine if a model Code of Practice has been approved in a particular jurisdiction, check with your local WHS regulator.

An approved code of practice applies to anyone who has a duty of care in the circumstances described in the code. In most cases, following an approved code of practice would achieve compliance with the health and safety duties in a jurisdiction's WHS Act and Regulations.
Like regulations, codes of practice deal with particular issues and do not cover all hazards or risks that may arise. Health and safety duties require you to consider all risks associated with work, not only those risk that regulation and codes of practice exist for.

While approved codes of practice are not law, they are admissible in court proceedings. Courts may regard an approved code of practice as evidence of what is known about a hazard, risk or control and may rely on the relevant code to determine what is reasonably practicable in the circumstances.

Duty of Care

Employers/PCBUs, self-employed persons, persons in control of the workplace, Supervisors, Designers, Manufacturers, Suppliers, Workers and Inspectors, have a legal responsibility under duty of care to do everything reasonably practicable to protect others from harm by

complying with safe work practices. This includes activities that require licences, tickets or certificates of competency or any other relevant state and territory OHS/WHS requirements.

Organisational and Site Requirements
During your site induction your employer will tell you where to find the compliance documentation relevant to your site and duties.

All work needs to be conducted in accordance with organisational policies and procedures and site requirements.

Procedures exist to ensure that all work is completed in a way that is safe and achieves the required outcomes efficiently without causing harm.

Manufactures Guidelines and Specifications
These requirements will be documented in operator's manuals, equipment specifications and work instructions.

Designers and manufacturers have a responsibility to ensure that structures, plant and equipment meet strict criteria for the safe operation and protection of workers while also meeting relevant environmental standards.

ENVIRONMENTAL PROTECTION REQUIREMENTS

When operating a EWP, you should always aim to reduce environmental risk and waste.

To do this you need to:

- Identify the environmental management plans, requirements and constraints.
- Confirm any aspect of the environmental protection requirements that may be unclear.
- Apply and comply with the project environmental protection requirements of all tasks undertaken in and around the worksite.

Some environmental requirements are:

- Organisational/project environmental management plans – These outline the steps and processes required to prevent or minimise harm to the environment due to work operations.
- Waste/clean-up management – This covers the disposal of site waste materials and rubbish as well as the recycling and re-use of waste materials.
- Water quality protection – This can include methods for directing run-off away from the stormwater system or other waterways. Spills of chemicals or other materials and the use of spill kits are included.

- Noise, vibration and dust management – These plans aim to limit or avoid creating noise pollution and vibration for people in and around the worksite. Dust management includes the use of screens, tarpaulins and other dust suppression methods.

The NSW Environmental Protection Authority (EPA) can investigate and issue fines for sites that do not meet the state and federal environmental protection arrangements that are in place.

If you have concerns, questions or queries about the exact requirements you must meet, you should speak to your supervisor, the site environmental officer or contact the NSW EPA for more information.

REVIEW TECHNICAL INFORMATION BEFORE YOU START

Before starting you need to make sure you obtain all the relevant technical information appropriate for your worksite. This will enable you to conduct your work in the safest and most efficient way. This may include:

- Identification and description of the work site (e.g. site details).
- Assessment of conditions and hazards (e.g. hazard report).
- Work requirements from work orders and supervisor instructions.
- Identifying equipment defects (e.g. fault reports or isolation systems).
- Accessing diagrams or plans.
- Safety Data Sheets.
- Consignment notes (items and weights).

GROUND CONDITIONS

Before setting up the EWP you need to check the ground suitability for the machine taking into consideration, workplace procedures and manufacture requirements.

Check the work area for the following factors that might influence the safe operation of the EWP:

- Rough uneven ground.
- Backfilled ground.
- Soft soils.
- Hard compacted soil.
- Rock.
- Bitumen.
- Concrete.

The work area should be flat and able to stand the weight of the machine.

If it is not flat, or if it has a soft base or has been backfilled etc., you will need to make sure you have the required ground cover, such as steel plates and/or sleepers, to control the hazards associated with loose or unstable ground.

If you are required to set up the EWP on a concrete slab ensure that a qualified engineer has inspected it and provided a report indicating that the slab is capable of supporting the EWP.

SELECTING THE CORRECT EWP FOR THE TASK

Depending on the job at hand there are a number of different EWPs available. The height, reach, safe working load, ground conditions and terrain all play a part in selecting the correct EWP.

TYPE	DESCRIPTION	EXAMPLE
Trailer Mounted EWP	These elevating work platforms are mounted on a moveable trailer and can be towed by most vehicles with a tow ball. They have manually adjusted stabilisers to provide stability for the platform while it is being used and have a range of working heights up to 26 metres.	
Self-propelled EWP with Telescoping Boom	These EWPs are self-propelled units for use on flat slabs or firm unsealed areas. The work platform is elevated using a straight extension (telescoping) boom. There are controls at ground level and on the platform.	

TYPE	DESCRIPTION	EXAMPLE
Self-Propelled EWP with Telescoping Knuckle Boom	These EWPs are self-propelled units for use on flat slabs or firm unsealed areas. The work platform is elevated by a boom, which has at least two main sections, with a knuckle between them, and is mounted on a turret that allows slewing. This arrangement permits the boom to reach up and over obstacles. Both sections of the boom may incorporate a telescoping extension. There are controls at ground level and on the platform.	
Vehicle-Mounted EWP	These EWPs are usually road-registered trucks with a boom or knuckle boom mounted on the truck chassis. The boom is mounted on a turret to allow slewing, and outriggers are fitted to the chassis. There are controls at ground level and on the platform.	

Table 2 – Types of EWP's

FORCES AND LOADS

When operating an EWP you need to be aware of the various forces and loads that affect the EWP:

Forces and Load	Explanation
Live Load	The load of all persons and/or materials that are being supported by the EWP.
Dead Load	The weight of the EWP.
Wind Load	The wind loadings, resulting from wind speeds up to the maximum permitted, taking into account the degree of the exposure of the site. Refer AS 2550.

Table 3 – Forces and Loads

RATED CAPACITY

The other consideration to make when selecting which EWP to use is the rated capacity of the machine. The rated capacity should be clearly marked on the side of the EWP or contained in the manufacturer's information.

The rated capacity includes the weight of all workers, tools and equipment in the platform.

For example if the rated capacity of an EWP you are operating is 250kg then the weight of the operator/s and the weight of the equipment must not be more than 250kg.

NEVER overload the EWP – doing this will make the EWP unstable and can cause damage to its structure.

Check the weight of all items and people that are going in the basket before loading the EWP to make sure the rated capacity is not exceeded.

When selecting which EWP to use you must also consider the boom length capabilities in relation to the work to be completed. The boom length capabilities are the nominal reach and vertical reach of the machine.

The nominal reach of an EWP is calculated by the horizontal distance from the centre point of rotation to the outer edge of the platform.

The vertical reach of an EWP is measured as the vertical distance from the ground or surface the EWP is on to the floor of the platform.

Both of these lengths are calculated when the platform is at maximum extension and will be available in the manufacturer's guidelines.

Figure 7 – EWP Data Plate Example

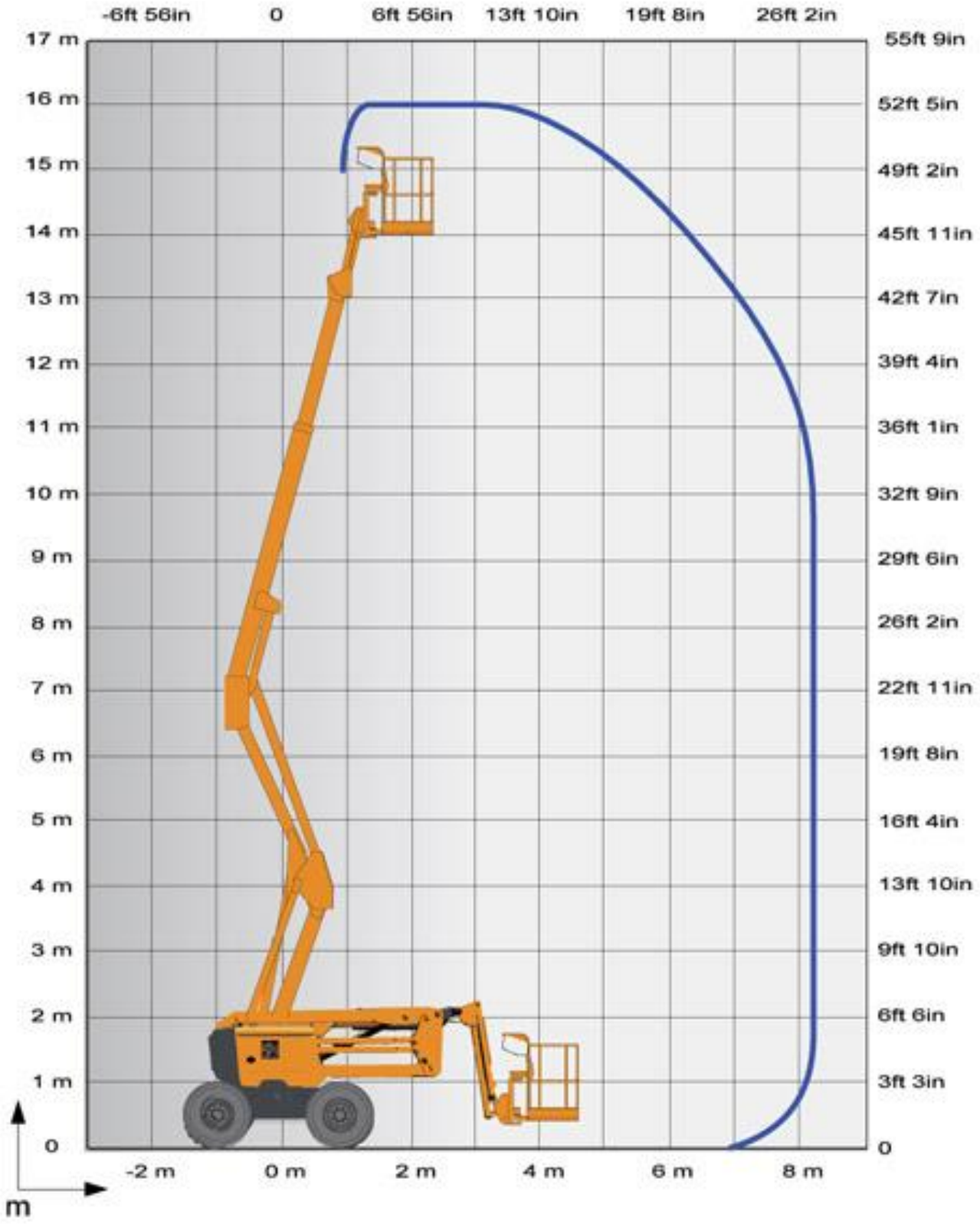

Figure 8 – EWP Reach Example

INENTIFY AND MANAGE HAZARDS

If you can remove or at least control a hazard you can reduce the risk involved. Each worksite has its own specific risks and hazards. Always check to see what systems and procedures are in place before conducting a risk assessment at a worksite, as they may affect the outcomes of the risk assessment.

It is important that personnel/workers with the required relevant skills are involved in the risk identification process.

Consult with other workers about hazards

Make sure you talk to the right people. This can include:

- Safety officers.
- Site engineers (where applicable).
- Supervisors.
- Colleagues.
- Managers who are authorised to take responsibility for the workplace or operations.

These people may have information about site hazards. It is important to communicate with other personnel and safety officers before starting on a worksite to ensure that any workplace policies or site-specific procedures are followed.

When looking for hazards ensure you look:

- **Above head height** - remember the EWP will be working well above your head.
- **At eye level** – look around to see if there is anything in the way of where you want to move the platform.
- **On the ground (and below)** – Also make sure the path of travel is clear and can bear the weight of the EWP.

Common workplace hazards include:

- Ground Conditions:
    - Surface condition
    - Spills
    - Debris
    - Underground Services
    - Weight bearing ability
    - Recently filled trenches
    - Slopes, ramps, and inclines
- Poor lighting.
- Overhead Hazards:
    - Electricity/Powerlines

- Overhead service lines
- Obstructions
- Trees
- Scaffolding
- Service pipes
- Bridges

- Surrounding Structures:
  - Buildings
  - Obstructions

- Traffic:
  - Pedestrians
  - Vehicles
  - Other plant
- Weather:
  - Wind
  - Lightning
  - Rain / Storms
- Site hazards:
  - Other workers
  - Equipment and machines
  - Facilities
  - Other equipment

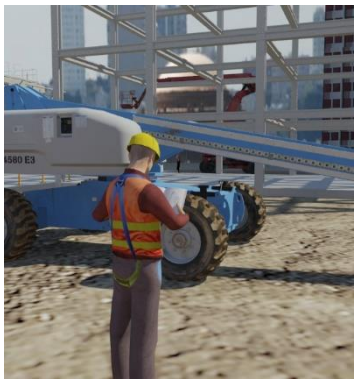

- Other hazards:
  - Dangerous materials
  - Chainsaws
  - Pressure washers
  - Tidal areas

Make a note of any hazard you identify in the area. Remember, a hazard can also be a situation so keep an eye on how the people around you are working too.

Each task/procedure/function needs to be evaluated for risks, as well as the work area where the work is being carried out.

You should also check records of injuries and incidents, safety tags and talk to other workers.

Safety Data Sheets (SDS) can be useful tools in identifying potential hazards so make sure you check the SDS documents for your site.

Talk to other workers, your manager, supervisor, team leader or health & safety representative to find out if the risk has already been addressed, and what techniques are available to you to resolve it.

If you find that there is no documentation or guideline in place to resolve an identified risk, you need to assess the risk and identify a feasible course of action to deal with it.

It is important that all records, policies and procedures are kept up to date so that the most relevant information is available and used.

WORKING NEAR ELECTRICITY/POWERLINES

The dangers of operating an EWP near electricity/power lines are very real.
It is vital that you are aware of the safe operating distances for different types of electricity/power lines and the steps you must take if the task requires you to work closer than these prescribed distances.

Generally, if you are required to work closer than the prescribed safe work distance you must:

- Contact the relevant local electrical authority for exemption.
- Have the electricity/power lines shut off (or insulated if this is not possible).
- Use a safety observer - A safety observer is a competent person who watches and guides plant and equipment around electricity/power lines. Check with each state authority for their safety observer requirements.

Distances vary depending on the voltage of the electricity/power lines. You should refer to the local electrical authority for information and advice to determine the voltage of electricity/power lines in your work area.

Figure 9 – Typical Powerlines

SA / TAS / ACT (AS2550.1)

In South Australia, Tasmania and the ACT, equipment must not be closer than the following distances to electric/power lines:

Electricity/Powerline Type	Distance
Distribution lines up to and including 133kV (usually poles)	6.4m or 3.0m with a qualified 'safety observer'
Transmission lines greater than 133kV (towers)	10m or 8m with a qualified 'safety observer'

Victoria

In Victoria the Framework for Undertaking Work Near Overhead and Underground Assets states that equipment must not be closer than the following distances to electricity/power lines:

Electricity/Powerline Type	Distance
Distribution lines up to and including 66kV (power poles)	6.4m or 3.0m with a qualified 'safety observer'
Transmission lines greater than 66kV (towers)	10m or 8m with a qualified 'safety observer'

New South Wales

In New South Wales, equipment operation may not be any closer than the following distances to electric/power lines:

Electricity/Powerline Type	Distance
Up to 132kV	3.0m
132kV up to 330kV	6.0m
More than 330kV	8.0m

To work closer than these distances requires authority from the relevant electrical authority and adherence to cl.64(2)(e) of the regulations.

Queensland

The Queensland Electrical Safety Regulation breaks down the distances in detail. Exclusion zones are broken down not only by size of electricity/power line but also by the competency level of the operator. This means that the requirements should be clarified with the electrical authority before work commences even if the distance appears to be outside the zones.

The Code of Practice gives the following minimum distances as guidance:

Electricity/Powerline Type	Distance
Up to 132kV	3.0m
132kV up to 330kV	6.0m
330kV to 500kV	8.0m

Western Australia

In Western Australia this falls under Regulation 3.64 from the OSH Regulations and states the following as the minimum distances:

Electricity/Powerline Type	Distance
0 to 1000V	1.0m
1Kv to 33kV	3.0m
33kV to 330Kv	6.0m

Northern Territory

In the Northern Territory safe electric/power line working distances falls under the Electricity Reform (Safety and Technical) Regulations. Table 2, Schedule 3 gives the following minimum distances:

Electricity/Powerline Type	Distance
Up to 33kV	1.5m
Above 33kV to 132kV	3.0m
Above 132kV to 275kV	4.0m
275kV to 330kV	6.0m
Above 330kV to 500kV	8.0m

Table 4 – Powerline clearance distances

Tiger Tails

Tiger tails are used as a visual aid to identify the location of overhead electricity/power lines. It is important to note that tiger tails DO NOT insulate the electricity/power lines so exclusion zones and safe operating distances must still be maintained, even when tiger tails are present.

Figure 10 – Tiger Tails

RISK MANAGEMENT

Risk Management is the process of reducing or managing the risks when working with a hazard or in a hazardous situation and should take into consideration the context of the organisation and work site.

Risk Management must be conducted in accordance with:

- Legislative, organisational and site requirements/procedures.
- Australian Standards.
- Codes of Practice.
- Employment and workplace relations legislation.
- Equal employment opportunity and disability legislation.

Consultation, communication, monitoring and review should be planned for and carried out at every stage of the risk management process.

Identifying risks and hazards and establishing ways of controlling them usually includes talking to the people with knowledge of the situation, or who are directly affected by any action you may take.

Controlling a hazard should be a team effort and it's important that everybody not only has input, but knows what they need to do and how/if they need to change their work processes to suit.

Monitoring and review are an important part of the risk management process and should be planned for at every stage. Monitoring and review involves regular surveillance and checking and clearly identifying the responsibilities of those involved.

It is important that monitoring and review results are recorded, reported and stored for future reference.

PRE—WORK HAZARD ASSESSMENT E.G. SWMS/JSEA'S ETC

A Risk Assessment to identify hazards is to be undertaken prior to commencing work. Such Risk Assessments as an example may include:

- Personal Risk Assessments;
    - Take 5, and
    - SLAMS.
- Group Risk Assessments;
    - Safe Work Method Statements (SWMS), and
    - Job Safety and Environment Analysis (JSEA's).

SWMS/JSEA's may also have been used in the development of as Safe Work Procedures (SWP) and Standard Operating Procedures (SOP). They detail the steps required to carry out a task as well as how specific hazards and risks related to a task will be managed.

They fulfil a number of objectives:

- They outline a safe method of work for a specific job.
- They provide a documented set of steps/processes that workers must read and understand before starting the job.
- They assist in meeting legal responsibilities for the risk management process, hazard identification, risk assessment and risk control.
- They assist in effectively coordinating the work, the materials required, the time required and the people involved to achieve a safe and efficient outcome. They are a quality assurance tool.

How do you complete a SWMS/JSEA?

Each organisation will have different forms and documents to manage risk, some called SWMS, JSEA, JSA etc. The fundamental steps remain the same as follows:

- Break the job down into its basic steps.
- Identify the workplace hazards associated with each step.
- Identify controls to eliminate or control those hazards.
- Rate/rank the risk with the controls in place, this is called the residual risk.
- Once agreement to the hazards and risk ratings has been achieved, the residual risk must be as low as reasonably achievable.
- Each person signs the SWMS/JSEA acknowledging that they have understood its contents.
- Put controls in place.
- Proceed with job, monitoring the controls for effectiveness and looking for new hazards.

The SWMS/JSEA must be available for inspection at any given time and must be reviewed as conditions change.

Risk / Hazard Assessment

Risk/Hazard Assessment has 2 stages:

(1) Risk/Hazard Analysis.

Risk analysis is used to determine the seriousness of a hazard based on how likely it is to happen and the consequences if it does happen. The risk level of each identified hazard should be worked out. Risk analysis comprises of 3 factors Likelihood, Consequence and Risk level.

Using a table similar to the one below, you can analyse how high the risk level is.

Likelihood	Consequence				
	Insignificant	**Minor** First Aid required	**Moderate** Medical attention and time off work	**Major** Long term illness or serious injury	**Severe** Kill or cause Permanent Disability or Illness
Almost certain	M	H	H	VH	VH
Likely	M	M	H	H	VH
Possible	L	M	H	H	VH
Unlikely	L	L	M	M	H
Rare	L	L	M	M	M

Table 5 – Likelihood vs Consequence Matrix

(2) Risk/Hazard Evaluation.

Risk evaluation is based upon the outcomes and results of the risk analysis.

Risk evaluation involves making decisions about:

- Have all the hazards been controlled.
- Is the residual risk acceptable.
- Is it safe to proceed.

Your evaluation should be used to determine how soon you should act to remove or control the hazard to achieve an acceptable level of risk.

You can do this using a table similar to the one shown below:

Risk Level	Action
Very High	Act immediately: The proposed task or process activity must not proceed. Steps must be taken to lower the risk level to as low as reasonably practicable using the hierarchy of risk controls.
High	Act today: The proposed activity can only proceed, provided that: 1. The risk level has been reduced to as low as reasonably practicable using the hierarchy of risk control. 2. The risk controls must include those identified in legislation, Australian Standards, Codes of Practice etc. 3. The risk assessment has been reviewed and approved by the Supervisor. 4. A Safe Working Procedure or Safe Work Method has been prepared. 5. The supervisor must review and document the effectiveness of the implemented risk controls.

Medium	Act this week: The proposed task or process can proceed, provided that: 1. The risk level has been reduced to as low as reasonably practicable using the hierarchy of risk controls. 2. The risk assessment has been reviewed and approved by the Supervisor. 3. A Safe Working Procedure or Safe Work Method has been prepared.
Low	Act this week: The proposed task or process can proceed, provided that: 1. The risk level has been reduced to as low as reasonably practicable using the hierarchy of risk controls. 2. The risk assessment has been reviewed and approved by the Supervisor. 3. A Safe Working Procedure or Safe Work Method has been prepared.

Table 6 – Hazard Evaluation Level example

Note: Any hazard with a residual risk level of high or very high should have further risk treatment measures (controls) in place to reduce the risk to an acceptable level. They will also require a higher level of approval in most cases and a higher level of risk management processes.

RISK/HAZARD TREATMENT

Once hazards have been identified, risk treatment options (controls) need to be considered and applied. Risk treatment involves selecting one or more controls to modify and reduce a risk and then implementing the control. Controls act as a barrier or layers preventing the unwanted event from happening. Every control has its limitations or holes in each layer and can be likened to a piece of Swiss cheese, the more layers / controls the more effective.

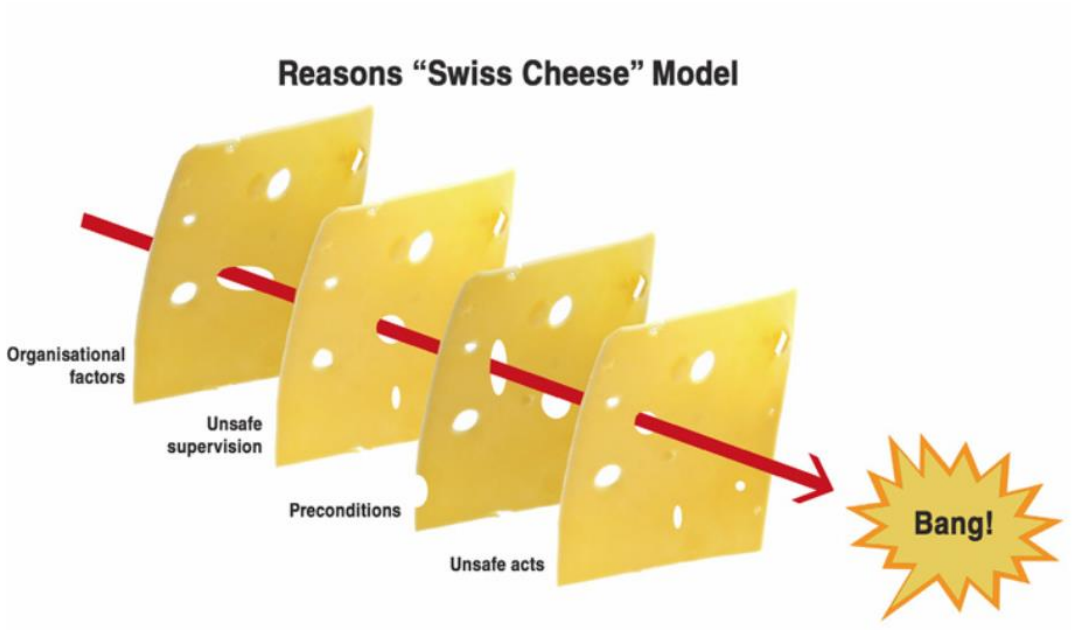

Figure 11 – "Swiss Cheese" model

Hierarchy of Control

Control measures can be ranked from the highest level of protection and reliability to the lowest. The WHS Regulations require duty holders to work through this hierarchy to choose the control that most effectively eliminates or minimises the risk in the circumstances. This may involve a single control measure or a combination of two or more different controls.

The hierarchy of control is as follows:

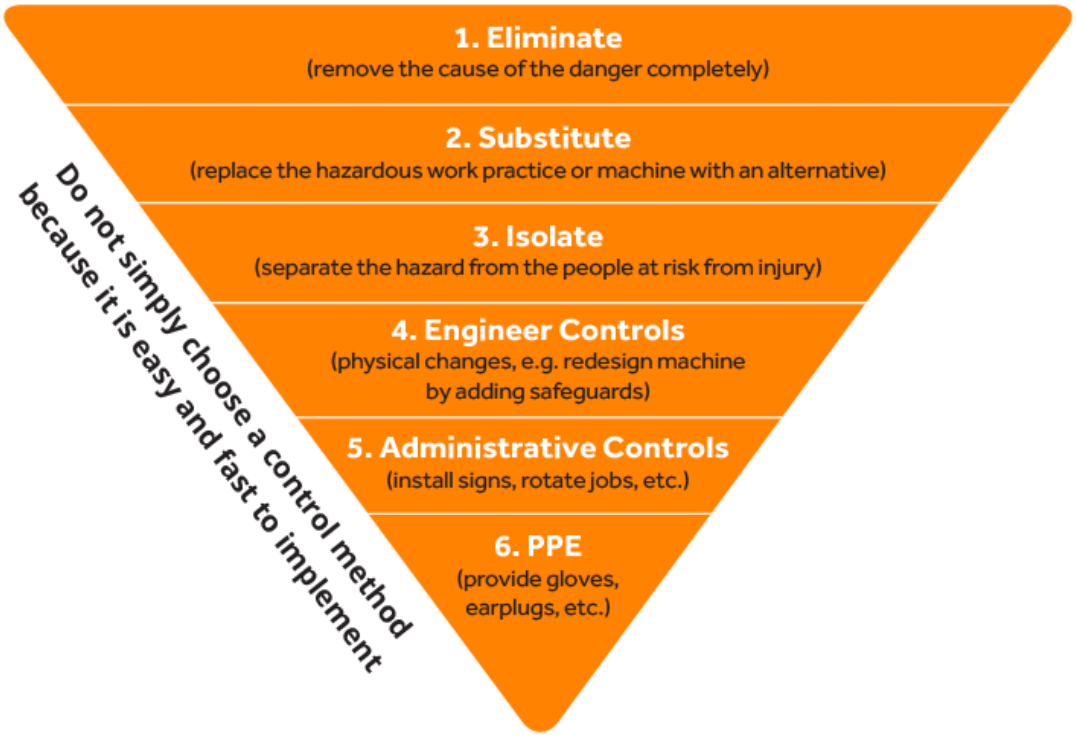

Figure 12 – Hierarchy of Control

SAFE WORK PRACTICES

Safe work practices are methods that must be implemented to make sure a job is carried out as safely as possible. Safe work practices are governed by legislative requirements and workplace procedures and relate to such things as drugs and alcohol at work, requirements for safe work at heights, including safety devices, general requirements for use of personal protective equipment and clothing just to name a few.

The scope of tasks and the safe work practices you are going to apply should be referred to, and documented, when completing Safe Work Method Statements (SWMS) or Job Safety and Environment Analysis (JSEA).

This will provide a guideline for how to carry out all tasks safely in accordance with WHS requirements.

APPLY CONTROL MEASURES

Control measures need to be implemented before you start work, or as soon as a hazard is identified during the work.

Talk to the other workers in the area to make sure they are aware of the work you are doing, and the control measures you have put in place.

Control measures could include:

- Disconnecting power when working near power lines or overhead services.
- Putting safety tags on electrical switches or isolators to stop somebody from turning the power back on while you are working on or near power lines.
- Insulating power lines.
- Using a safety observer (also known as a spotter) inside the exclusion zone to make sure you don't get too close to power lines.
- Setting up barricades and traffic control to keep the area clear.
- Placing pedestrian controls (barricades, signs, etc.) to limit the number of people in the area.
- Moving any obstructions out of the way.
- Wearing PPE such as high-visibility clothing and non-slip work boots.
- Setting up additional lighting in the work area.
- Put excavation safeguards in place (if applicable).

Check the situation after you have applied a control measure to see if more controls, or different controls are needed to make the job safe. If more controls are needed, make sure they are applied before you start or continue the work.

Personal Protective Equipment (PPE)

Personal Protective Equipment (PPE) is clothing and equipment designed to lower the chance of you being hurt on the job. It is required to enter most work sites.

You should select and inspect your PPE before you start work. All operators working in the EWP platform need to have:

- A safety harness and fittings.
- Hard hat.
- Rubber soled shoes.

Other PPE includes:

- Hand protection – gloves.
- Eye protection – goggles, visors or glasses.
- Ear protection – plugs or muffs.
- Breathing protection – masks or respirators.
- Hi-visibility clothing – clothing that makes you stand out and lets other people know where you are.
- Weather protection – clothing that protects you from the sun or from the cold.

Make sure any PPE you are wearing is in good condition, fits well and is right for the job.

If you find any PPE that is not in good condition, tag it and remove it from service. Then tell your supervisor about the problem and they will organise to repair or replace the PPE.

Strategies for Traffic Control

If the work area is going to be shared with pedestrians, site personnel, vehicles or mobile plant, you will need to make sure you have control measures in place before you start.

These may include:

- Using a flag person or traffic controller to control traffic.
- Setting up flashing hazard lights.
- Setting up warning signs and barriers.
- Setting up pedestrian and vehicle exclusion zones.
- Using a Traffic Management Plan.

Barriers with safety signs, or a traffic controller, should always be in place when the EWP is being operated over a roadway, footpath or public access area.

Strategies for operation in darkness

If you are using the EWP at night or in dark areas, additional lighting needs to be used across the entire work area.

This is to make sure you and other workers can see properly and work safely.

REPORTING AND RECORD KEEPING

Make sure you record any action you have taken and talk to your supervisor and WHS officer about the control strategies in place. Keeping records is important as they can help ensure that any risk management activities are traceable.

Records also provide a basis for improving methods and tools in the risk management process, as well as improving the overall process.

COMMUNICATION METHODS

As an EWP operator you need to be able to communicate with workers around you while you work, and you need to be able to understand the instructions to use the EWP safely.

These can include:

- Manufacturers guidelines (instructions, specifications, checklists).
- Industry operating procedures.
- Workplace procedures (work instructions, operating procedures, checklists).

Workplace communication may take the form of:

- Verbal and non-verbal language.
- Written instructions.
- Signage.
- Making and interpreting hand signals.
- Fixed channel two-way radios.
- Bells, buzzers and whistles.
- Active listening.
- Questioning to confirm understanding and appropriate worksite protocol.

You need to decide how you are going to communicate with other workers while you are still at the planning stage of the task.

ACTION	WHISTLE, BELL or BUZZER	HAND SIGNAL
Luffing Boom up	3 Short ● ● ●	
Luffing Boom Down	4 Short ● ● ● ●	
Telescope Out	1 Long, 3 Short — ● ● ●	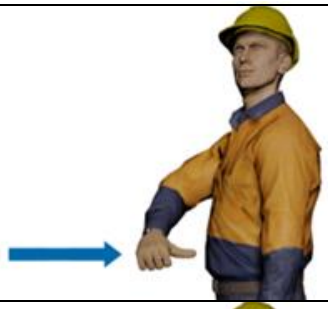
Telescope In	1 Long, 4 Short — ● ● ● ●	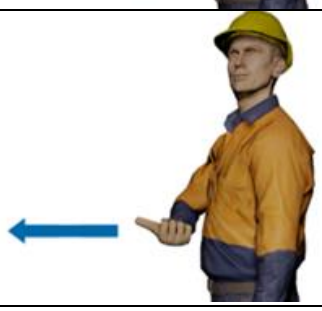
Stop	1 Short ●	

Table 7 – EWP Hand Signals

WORK/TASK PLANNING CONFIRMATION

As confirmation for your planning, ensure you have taken into consideration:

- Communications on site, are they safe and adequate.
- Safe access and egress from the EWP.
- Location and specifics of the task.
- Permits required for the task.
- Type and availability of equipment required for the task.
- EWP required for the task (capacity, type, reach).
- Boom movements to access the task once the EWP is in position.
- Number of spotters required to safely carry out the task.
- Skills, experience and qualifications of EWP operators.
- Suitable safety equipment including appropriate fall arrest harness and lanyard.

Make sure you have access to everything you need before you start setting up the EWP.

PREPARE FOR WORK/TASK

Prior to accessing the EWP ensure:

- Work/Task activities have been communicated with the work team and any effected work groups.
- Communication methods are in place and maintained.
- All controls for hazards identified are in place and effective.
- All safety equipment and PPE identified.

ACCESSING EWP

Before you perform the pre-start inspection, visually check the immediate area for trip hazards, moving parts, and existing ground conditions. Ensure that the EWP is shut down and any unauthorised personnel or items of equipment are clear of the immediate area.

Before Inspecting or accessing the EWP, ensure that:

- EWP is parked on stable, level ground in an appropriate area.
- Area is free of overhead and ground-level obstructions.
- Tower and main booms are fully retracted and lowered.
- Platform/ground selector switch is in the centre (OFF) position.
- Power/emergency stop switch is down (OFF).
- EWP is isolated and locked out as per manufacture and site requirements.
- Brakes are holding the EWP in position and wheels are chocked.

Always maintain 3 points of contact when getting on or off of the EWP.

Figure 13 – 3 Points of contact

EWP footprint

The EWP footprint is the total area directly underneath the EWP body. During the pre-start inspection, the operator must inspect areas within the EWP footprint.

PRE-START INSPECTION

The EWP pre-start inspection includes:

- Review of Log Book.
- Chassis inspection.
- Turntable inspection.
- Boom inspection.
- Platform inspection.

Log Book

Each EWP should have a logbook with details specifically for that machine. Before using the EWP check the logbook to make sure the EWP is in working order. These are commonly found in a yellow waterproof pouch attached to the EWP basket. The EWP logbook is where details are recorded of:

- EWP operation (dates, times and operators).
- Daily safety checks that have been done.
- Defects that have been identified during checks.
- Action taken to repair or address defects.
- Servicing, maintenance and inspections that have been carried out.

When you check the logbook you need to confirm:

- It is the correct log book for the EWP.
- If there are any defects reported.
- If those defects have been fixed.

- The log book is up to date.
- That the scheduled maintenance and inspections have been done.

If the service log book indicates that the EWP has not been tested in accordance with the requirements of Australian standards; AS 2550 or that the EWP has faults that have not yet been repaired you should:

- Tag out the EWP.
- **DO NOT** use the EWP.
- Report the problems to the appropriate person as per site procedures.

Inspection Route

The route to be followed for the inspection should be methodical to ensure all aspects are covered. The suggested routes is as follows:

1. Platform.
2. Left-hand side rear.
3. Left-hand side front.
4. Front.
5. Right-hand side front.
6. Right-hand side rear.

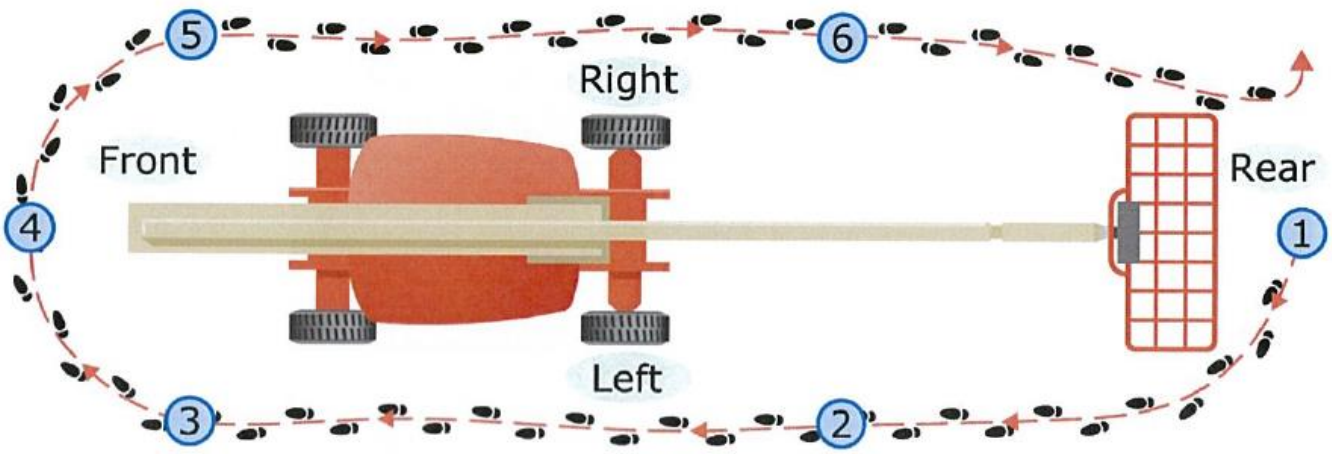

Figure 14 – Inspection route

Inspection

INSPECTION AREA	CHECKS
Platform 	Platform assembly gate: • No loose or missing parts, no visible damage. • Latch, stop and hinges in working condition. • Foot switch in good working order and not modified, disabled or blocked. • Fire extinguisher for correct pressure, security and damage. Platform control console: • Switches and levers in neutral. • No loose or missing parts, no visual damage. • Decals/placards secure and legible. • Control markings legible.
Left-hand side Engine Compartment 	Left rear: • Platform pivot pin – properly secured, no visible damage. • Main boom sections – no visible damage, wear pads secure. All cylinders properly secured. • Frame – no visible damage, no loose or missing hardware (top and underside). • Steering cylinder assembly (four-wheel steer only) – properly secured, no visible damage or signs of leakage. • Spindle (four-wheel steer only) – no loss or missing parts, no visible damage. • Drive motor and brake – no visible damage, no evidence of leakage. • Drive hub – no visible damage, no evidence of leakage. • Wheel/tyre assembly – properly secured, no looser missing lug nuts, no visible damage. • Tower boom/upright – no visible damage, wear pads secure. All cylinders properly secured. Upright in vertical position. • Flow valves – no visible damage, no evidence of leakage, no unsupported hoses.

INSPECTION AREA	CHECKS
Left-hand side (continued)	• LPG gas tank (if equipped) – brackets, hose and fittings secure, no visible damage, no missing parts. • Hydraulic swivel – no loose or missing parts, no evidence of leakage. • Engine tray pivot – no loose or missing parts, no evidence of damage. • Hydraulic pumps – no loose or missing parts, no evidence of leakage. • Muffler and exhaust system – properly secured, no evidence of leakage. • Engine oil supply – full mark on dipstick, filler cap secure. • Battery, proper electrolyte levels, cables tight, no visible damage or corrosion. • Engine air filter – no loose or missing parts, no visible damage, element clean. • Door and latches – hood door and latches in working condition, properly secured, no loose or missing parts. • Drive motor and brake (four-Wheel drive only) – no visible damage, no evidence of leakage. • Drive hub – no visible damage, no evidence of leakage. • Wheel/tyre assembly – properly secured, no looser missing lug nuts, no visible damage. **Warning** *If the tower boom does not rest on the stop in the stowed position, it is likely that the upright is out of plumb.*

INSPECTION AREA	CHECKS
Front 	• Spindle, left and right – properly secured, no loose or missing parts, no visible damage. • Oscillating axle cylinder, left and right (if fitted) – properly secured, no visible damage or signs of leakage. • Steer cylinder assembly, left and right – properly secured, no visible damage or signs of leakage. • Oscillating axle cylinder, left and right (if fitted) – properly secured, no visible damage or signs of leakage. • Dual capacity and horizontal cut-out limit switches (if fitted) – properly secured, no damage to the switches. Arm free to move, free of dirt and grease. • Tie rod and steering linkage – no loose or missing parts, no visible damage.
Right-hand side Ground control panel 	Right front • Wheel/tyre assembly – properly secured, no loose or missing lug nuts, no visible damage. • Drive hub (four-wheel drive only) – no visible damage, no evidence of leakage. • Drive motor and brake (four-wheel drive only) – no visible damage, no evidence of leakage. • Oscillating cam valve (if fitted) – no visible damage, no evidence of leakage, no unsupported hoses. • Door and latches – hood door and latches in working condition, properly secured, no loose or missing parts. • Swing drive motor and brake – no visible damage, no evidence of leakage. • Fuel tank – fuel filler cap secure, no visible damage, no evidence of leaks. • Ground controls – switches operable, no visible damage, decals secure and legible. • Hydraulic oil breather – element in place, not clogged, no sign of overflow.

INSPECTION AREA	CHECKS
Right-hand side (continued) Hydraulic oil gauge 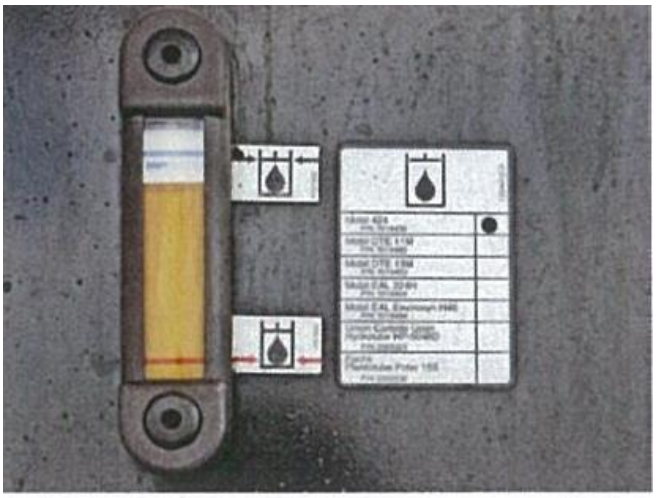	• Hydraulic oil supply – recommended oil level in sight gauge, cap in place and secure. • LP gas tank (if equipped) – brackets, hose and fittings secure, no visible damage, no missing parts. • Manual descent (if equipped) – no evidence of leakage, no visible damage. • Hydraulic oil return filter housing – housing secure, no visible damage, no evidence of leakage. • Hydraulic oil medium pressure filter housing – housing secure, no visible damage, no evidence of leakage. • Turntable bearing and pinion – no loose or missing hardware, no visible damage, evidence of proper lubrication. • Control valve (tank compartment) – no visible damage, no evidence of leakage, no unsupported wires or hoses, no damaged wires. • Auxiliary power pump – no loose or missing parts, no evidence of leakage, no damaged wires. • Turntable lock – operable, no missing parts, no visible damage. • Steering linkage (four-wheel drive, if equipped) – no loose or missing parts, no visible damage. • Wheel/tyre assembly – properly secured, no loose or missing lug nuts, no visible damage. • Drive hub – no visible damage, no evidence of leakage. • Drive motor and brake – no visible damage, no evidence of leakage. • Spindle (four-wheel drive, if equipped) – no loose or missing parts, no visible damage, evidence of proper lubrication. • Steering cylinder assembly (four-wheel steer, if equipped) – properly secured, no visible damage or signs of leakage.

INSPECTION AREA	CHECKS
Right-hand side (continued)	• Power pack – no loose or missing parts, no visible damage. • Dual capacity limit switch – properly secured, no damage to the switch, arm free to move, free of dirt and grease. • Articulating jib boom – properly secured, no visible damage, no loose or missing parts. • Rotator motion control valve – no visible damage, no evidence of leakage, no unsupported hoses, no damaged wires. • Rotator – properly secured, no visible damage, no evidence of leakage. **Warning** *Check the hydraulic-oil level only when oil is cold, system has been shut down, and EWP booms have been retracted and lowered.*

Table 8 – EWP Pre-start inspection

Every time you operate an EWP, complete the relevant documentation. This may include the:

- Pre-start inspection checklist or log.
- Daily time/load sheet.

A daily time/load sheet must be filled in for all operations conducted with the EWP, in accordance with site procedures.

Safety Equipment

You must check all safety equipment before staring up the EWP. Safety equipment that is required by a EWP operator includes:

- Safety harness.
- Energy absorber.
- Lanyard.
- Anchor points.

The safety harness is the most important piece of protective equipment that a EWP operator uses.

Check that the harness fits properly and that it is in good condition. When inspecting your harness ensure that you check the:

- Webbing.
- Snap hooks.
- Buckles and adjusters.
- Sewing.
- D-rings.

Check the energy absorber and lanyard assembly for damage or wear, and check that it is correctly attached to the harness.

Whenever climbing into the EWP platform always use 3 points of contact. Check that the gate on the EWP platform closes automatically behind you.

There are specific reinforced anchor points within the EWP platform that the lanyard needs to be attached to.

Check that these anchor points are in good condition and that the lanyard attaches properly, allowing you to move freely in the platform.

START UP ROCEDURE

Initial starting should always be performed from the ground control station.

- Turn the key in the PLATFORM/GROUND SELECTOR to GROUND.
- Pull the POWER/EMERGENCY STOP switch to the ON position.
- Wait until the glow plug indicator light goes out.
- Push and hold up the ENGINE START switch until the engine starts. Listen for abnormal noises.
- After the engine has had sufficient time to warm up, push the POWER/EMERGENCY STOP switch to shut the engine OFF.
- Turn the key in the PLATFORM/GROUND SELECTOR to PLATFORM.
- From the platform control station, pull the POWER/EMERGENCY STOP switch to the ON position.
- Push and hold the ENGINE START switch forward until the engine starts.

Warning

- *Initial starting should always be performed from the ground control station.*
- *Allow the engine to warm up for a few minutes at low speed before applying any load.*
- *Foot switch must be released (i.e. in the up position) before the starter will operate. Do not operate the machine if the engine starts with the foot switch in the depressed position.*

OPERATIONAL CHECKS

After the engine has started, observe the following cautions:

- Keep the engine speed at low idle until the engine has warmed up (typically, this will be from three to five minutes).
- Observe indicators, beacon and gauges for correct operation.
- Ensure that the area is free of overhead and ground-level obstructions.
- Test all functions controlled by the ground panel, then the functions controlled by the platform control panel.
- Perform the functional checks listed below from the ground control station, with no load in the platform.

Always check the manufacturers requirements as there are differences between make and models.

FROM GROUND CONTROL PANEL

The ground controls are there to bring the platform to the ground in case of an emergency as well for testing and maintenance purposes.

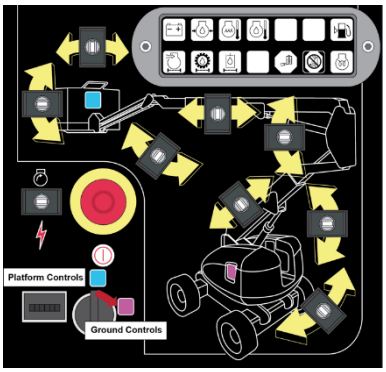

Using the ground controls check the following operations:

- Check that the control panel is secure.
- Ensure that all function controls and switches return to the OFF or NEUTRAL position when released.

<u>Warning</u>

- *Do not operate the machine if the switches do not return to the OFF or NEUTRAL position.*

Tower Boom Assembly

- Place the machine on level ground with the tower boom assembly in the stowed position.
- Identify the tower boom vertical limit switch adjacent to the tower lift cylinder at the bottom end of the tower base boom.
- Raise the left compartment cover and check that the plunger on the tower boom vertical limit is fully extended. If the plunger is not fully extended, do not operate the machine; contact maintenance.
- Attempt to extend the tower fly boom. The tower fly boom should not extend and the red boom malfunction light on the ground control panel should illuminate when the telescope switch is pressed.

- Raise the tower base boom to approximately 40 degrees, then lower the tower boom back to the horizontal position. While raising and lowering the tower boom assembly, observe the position of the upright. Ensure that the upright remains vertical (i.e. at a 90° angle) relative to the chassis, as indicated in the following diagrams.

Warning

- *Discontinue operation if the tower fly boom extends or the boom malfunction light does not illuminate.*
- *Discontinue operation if the upright is out of alignment or the boom malfunction light is flashing or on steady.*
- *Discontinue operation if the tower base boom lowers or the boom malfunction light does not illuminate.*

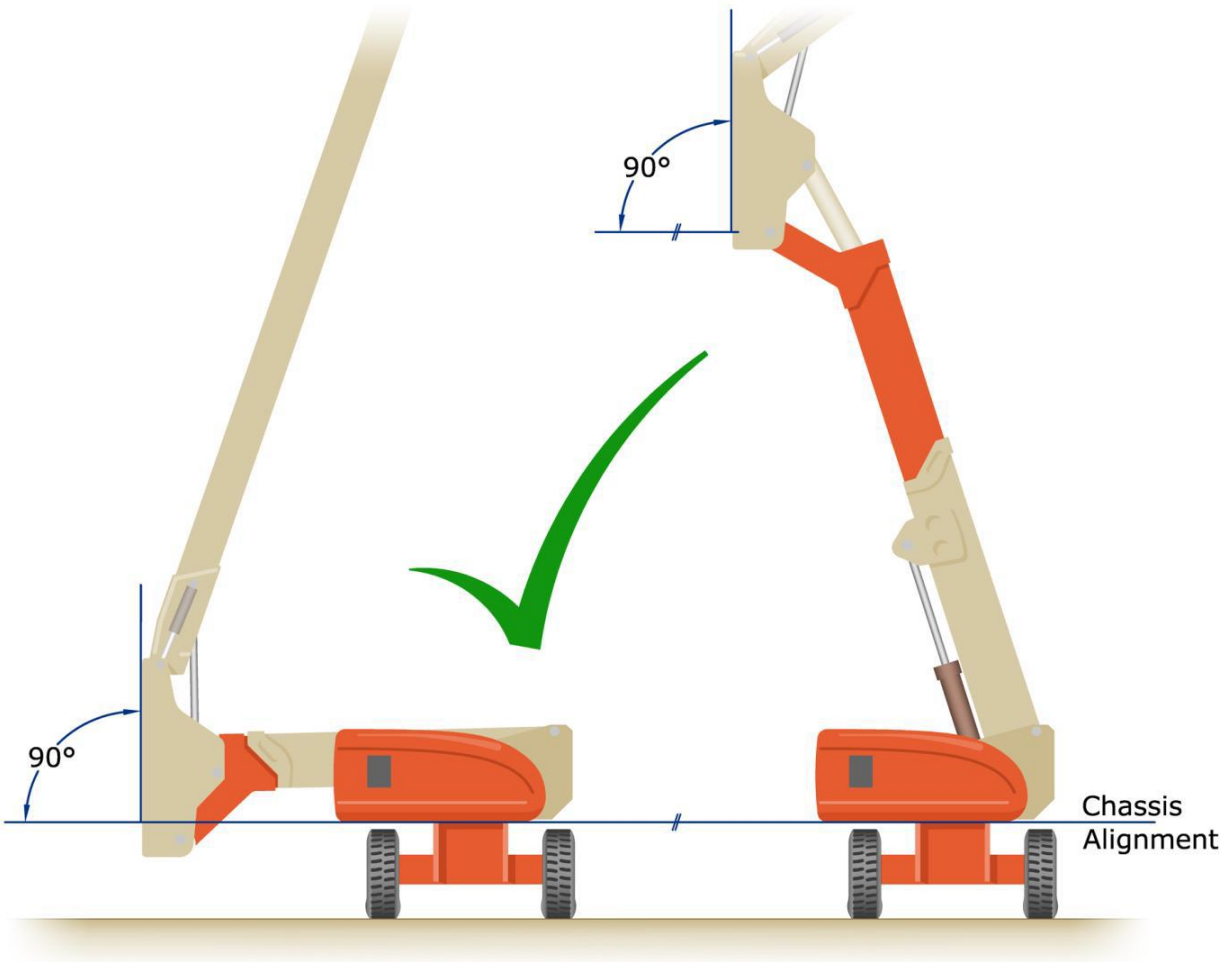

Figure 15 – Boom Upright Positioning - Correct

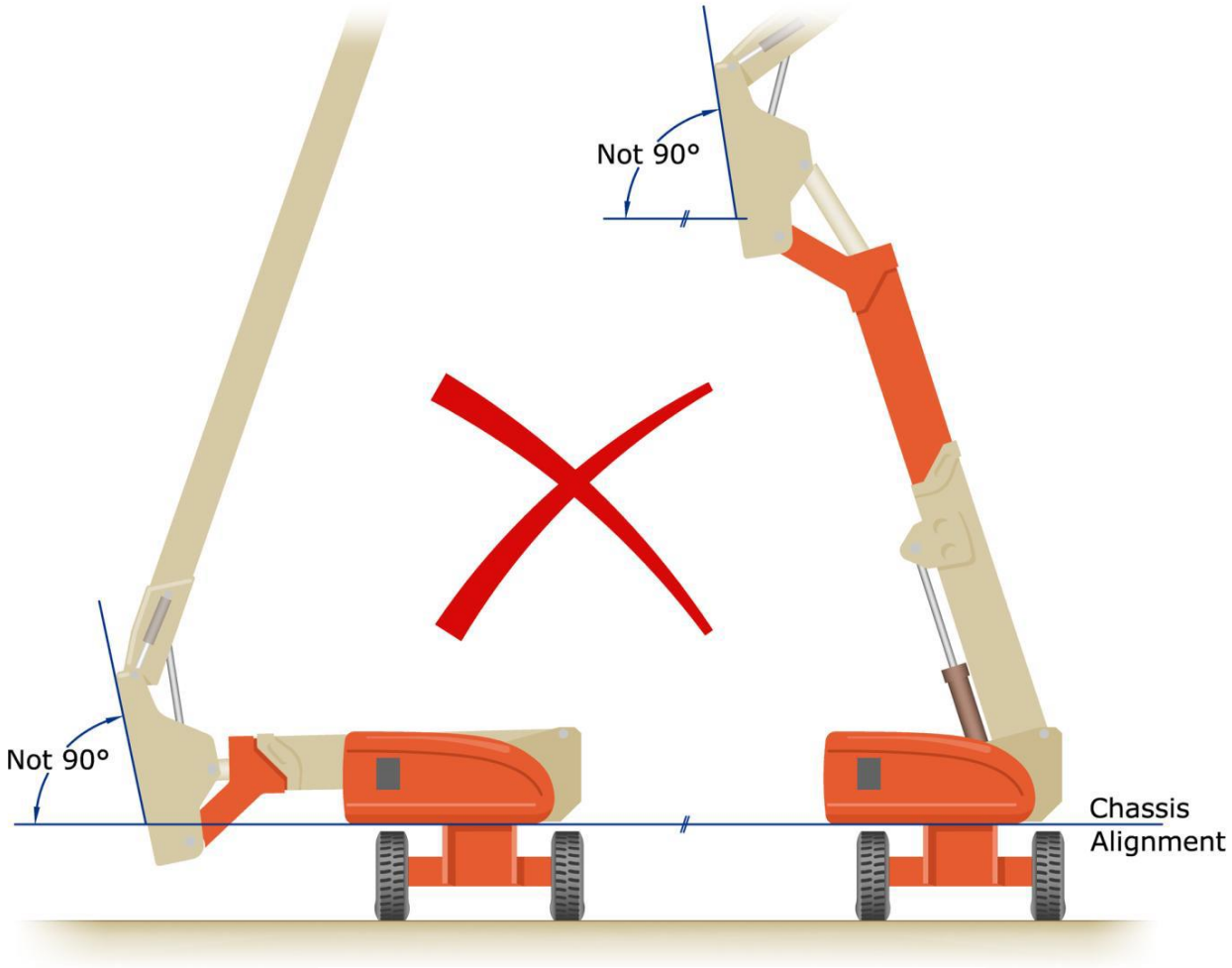

Figure 16 – Boom Upright Positioning - Incorrect

- Raise the tower to full height and extend the tower boom approximately 50 cm. Check that the plunger on the tower boom horizontal limit switch at the end of the tower base boom section is fully extended. If the plunger is not fully extended, do not operate the machine; contact maintenance.
- Attempt to lower the base boom while the tower fly boom is extended. The tower base boom should not lower and the red boom malfunction light should illuminate when the tower down switch is pressed.

Emergency Stop

- Check that all machine functions are disabled when the EMERGENCY STOP button is pushed IN.

Auxiliary Power

Operate each function control switch to ensure that it functions in both directions when auxiliary power is used instead of engine power.

FROM THE PLATFROM CONTROL STATION

Using the platform controls check the following operations:

- Check that the control panel is secure.
- Ensure that all function controls and switches return to the OFF or NEUTRAL position when released.
- Place the GROUND/PLATFORM SELECT switch to GROUND. Start the engine. The platform controls should not operate.

Warning

- *Do not operate the machine if the switches do not return to the OFF or NEUTRAL position.*

Foot Switch Adjustment and Operation

- With the engine and power shut down, depress the foot switch. Attempt to start the engine. The engine should not start when the foot switch is depressed.
- Start the engine. Activate the hydraulic system by depressing the foot switch. Activate a boom function. Continue to activate the function and remove your foot from foot switch. The motion should stop.
- Check adjustment of the foot switch. The foot switch must be adjusted so that functions will operate when the pedal is approximately at its centre of travel.
- The foot switch has a seven-second delay timer. If a function is not activated within seven seconds of depressing the foot switch, reset the foot switch.

Warning

- *Discontinue operation if the foot switch does not operate properly.*

Dual Capacity Switch

- On a level surface with less than maximum weight in the platform, raise the tower base boom to maximum angle, keeping the main boom horizontal.
- Extend the main fly boom until the CAPACITY INDICATOR light changes from red to green.
- With the main boom in this position, raise the main base boom until the CAPACITY INDICATOR light changes back to red.

Warning

Discontinue operation if the capacity indicator system does not operate properly.

Tower Boom Horizontal Limit Switch

- Place the machine on a level surface with booms retracted and lowered.
- From the platform control panel, position the DRIVE SPEED/TORQUE SELECT switch to FAST (forward position).

- Using extreme caution, partially position the DRIVE control to FORWARD — just enough to obtain a high engine speed, but not enough to cause the machine to move.
- Raise the tower base boom until the engine speed shifts from high speed to mid-speed. The bottom of the upright should NOT be above the hood level of the machine.

Warning

Discontinue operation if the upright is above the hood level of the machine.

Main Boom Horizontal Limit Switch

- Place the machine on a level surface with booms retracted and lowered.
- From the platform control panel, position the DRIVE SPEED/TORQUE SELECT switch to FAST (forward position).
- Using extreme caution, partially position the DRIVE control to FORWARD — just enough to obtain a high engine speed, but not enough to cause the machine to move.
- Raise the main boom until the engine speed shifts from high speed to mid-speed.
- This should take about 10 seconds and the platform will be approximately three metres from the ground.

Warning

Discontinue operation if the low engine does not engage.

Turntable

- Disengage the turntable lock by pulling the snap pin from the lock pin, and lifting the pin up to unlock the turntable.
- Return the snap pin to the lock pin to hold the lock pin in the disengaged position.
- Swing the turntable to LEFT and RIGHT a minimum of 45 degrees, and check for smooth motion.
- Lock the turntable by following the reverse procedure.

Tilt Alarm and Warning System

- With the platform in the transport position (tower base boom lowered, main fly boom retracted and main base boom below horizontal), drive up a suitable ramp that has at least a 3° slope. The tilt indicator light on the platform control console should illuminate and the alarm should sound.

Warning

Discontinue operation if the tilt alarm and warning system does not operate properly.

Emergency Stop

- Check that all machine functions are disabled when the EMERGENCY STOP BUTTON is pushed IN.

Auxiliary Power

- Using the auxiliary power instead of engine power, operate each function control switch to ensure that it functions in both directions.

Drive Functions

- Drive forward and reverse, checking for proper operation.
- Steer left and right, checking for proper operation.
- If the machine is fitted with four-wheel steer, check the rear steer left and right for proper operation.

Other Function Checks

- Check that the platform automatically levels during raising and lowering of the boom.
- Check that the platform level over-ride operates properly.
- Check the platform rotator for smooth operation and ensure that the platform will rotate 90 degrees in both directions from the centreline of boom.
- Raise and lower the articulating jib boom. Check for smooth operation.

Safety Devices

Part of the EWP start-up process is checking that all safety devices are working before you start the job.

Safety devices include:

- Horns/sirens.
- Audible and visual reversing devices.
- Operator restraint devices.
- Lights (where applicable).

Make sure each of these is working correctly before using the EWP.

Communication Equipment

Check that any communication equipment you are planning to use is working properly and is appropriate for the job before you start the task.

Report all Faults

If you find any defects, damage or signs of interference (tampering) during your inspection of the EWP you must:

- Immediately stop operating the EWP.
- Isolate the EWP and attach a safety tag to it.
- Record the fault in the EWP logbook, EWP service book and any other location outlined in site procedures.
- Report the fault to an authorised person, such as your supervisor, workplace security or the equipment owner for corrective action to be taken.

DO NOT use the EWP until it has been fixed, signed off by a competent person and returned to service.

SET UP EWP

The set up procedure includes:

- Relocate/Tramming EWP.
- Set up and stabilising the EWP.

Relocate/Tramming EWP

Operate the EWP according to:

- Manufacturer instructions.
- Site procedures.
- Conditions.

Note: Operate the controls in the platform only (except in an emergency).

1. Check that the route to be taken is relatively smooth and flat, clear of debris and overhead obstructions. 2. Obtain permission from authorised personnel if travelling in operational areas. 3. Maintain positive communications with other equipment operators in the area. 4. Use a spotter, particularly in tight areas or where visibility is limited.	
5. Ensure the EWP boom is in the travel position (lowered and locked in place).	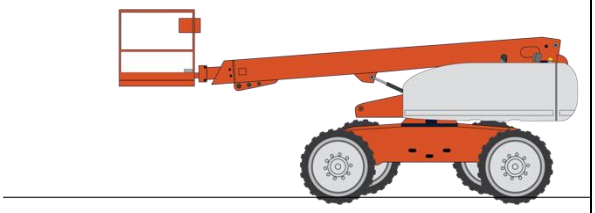

Note: • Do not drive a boom lift with the boom extended or above horizontal except on firm and level surfaces. • EWP stability is decreased if the boom is extended to the maximum length/height.	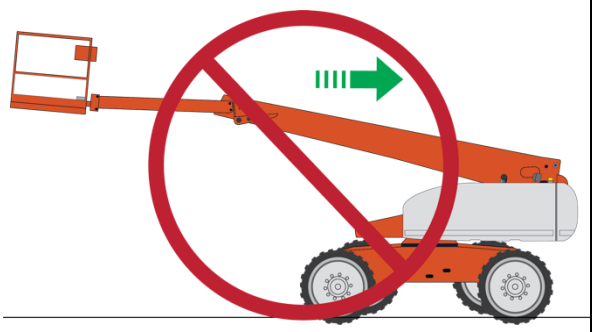
6. Check that EWP is in the drive position to ensure the controls correspond to the direction of travel. **Example:** With EWP boom positioned over rear axle, directions of the black and white arrows on the drive/steer joystick match the directions of the black and white arrow decal on the frame.	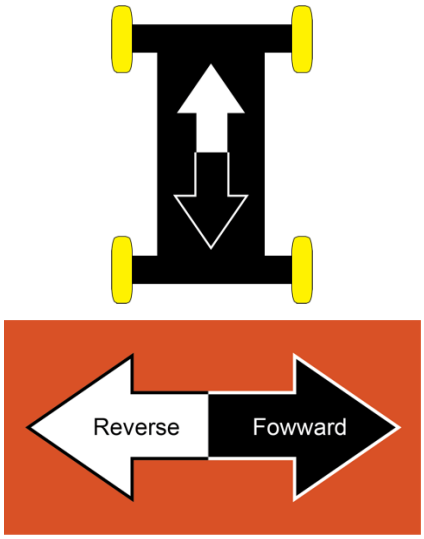
7. Face EWP in direction of travel, if possible. **Note:** • Drive forwards whenever possible (avoid driving in reverse).	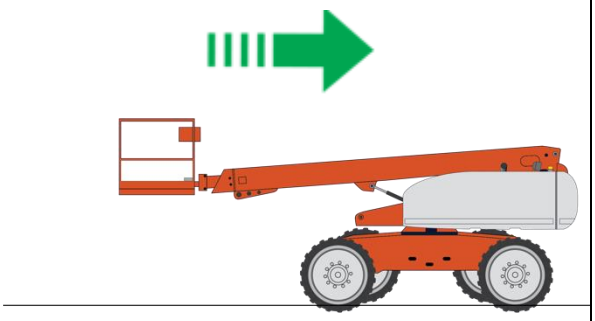
8. Press the dead man switch (if applicable). 9. Drive to the work area using the appropriate speed for the conditions.	

10. Stop as close to the work as practicable, so that the shortest possible boom length is used (for boom type EWP).	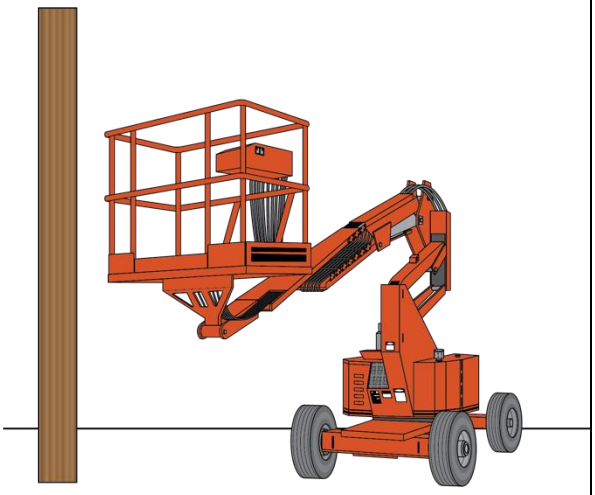
Note: • Drive straight up or down a slope, not across it.	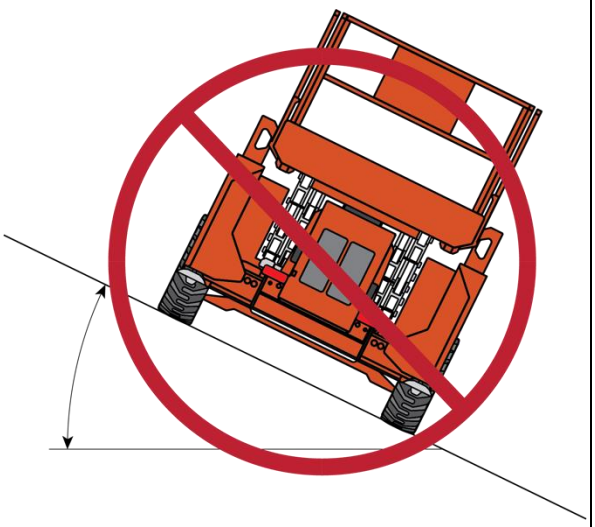
Note: • Maintain a distance of at least 2 metres from any obstruction and infrastructure.	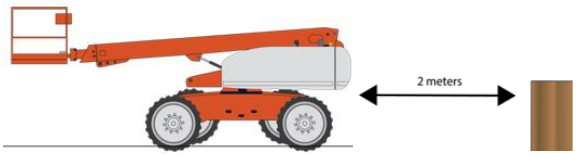

Table 9 – Relocating/Tramming EWP

SETTING UP AND STABILISING THE EWP

1. Park on firm, level ground and make sure the machine is level.

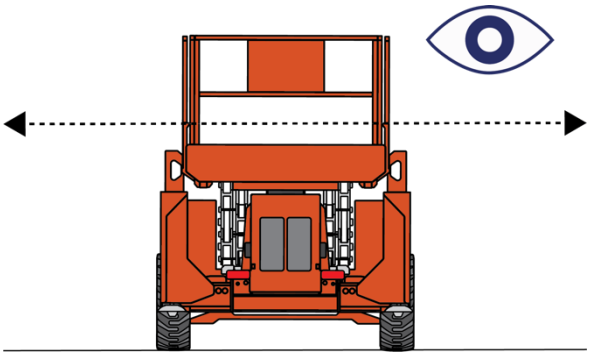

Note:

- Note the location of all overhead obstructions.
- Consider the full range of motion.

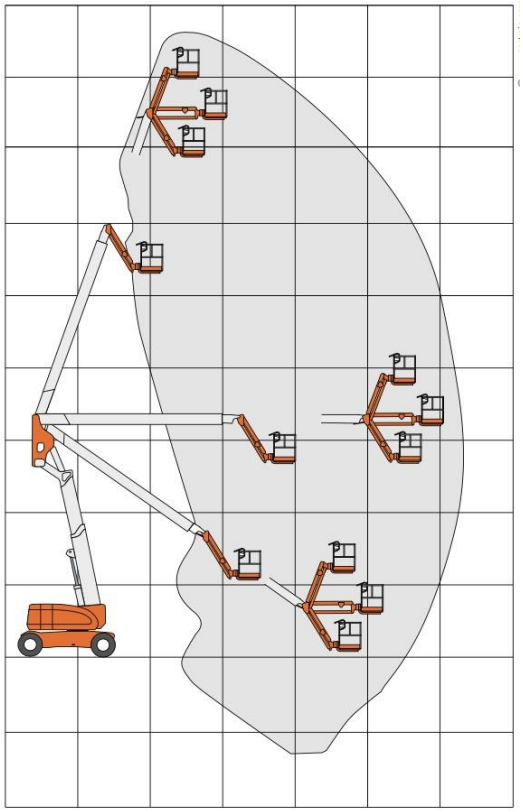

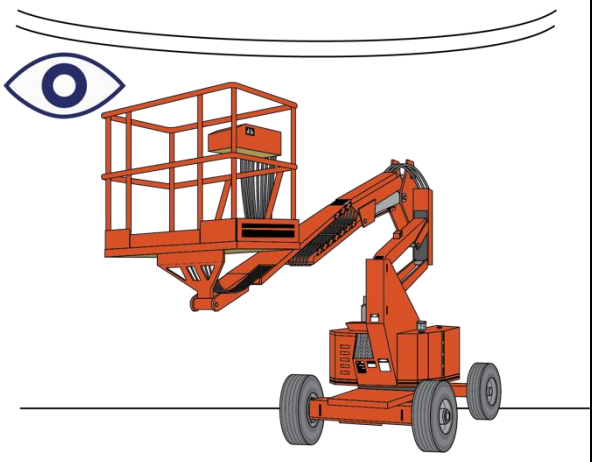

Note: • Do not exceed the maximum slope recommended by the machine manufacturer.	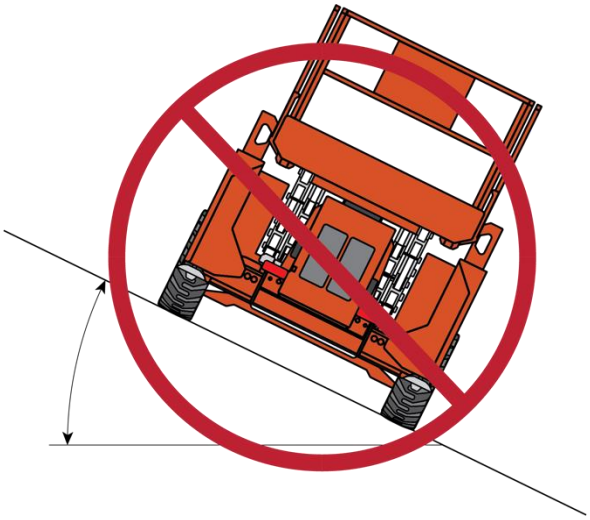
2. Chock the wheels to ensure that the machine will not move.	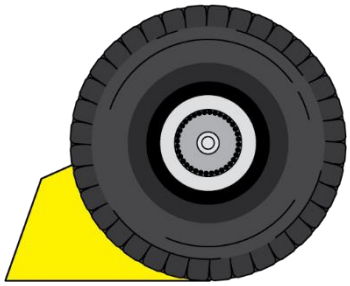
3. Create an exclusion zone around the work area. Zone must be large enough to include equipment and area of operation (drop zone).	
4. Extend and lower the stabilisers, if fitted.	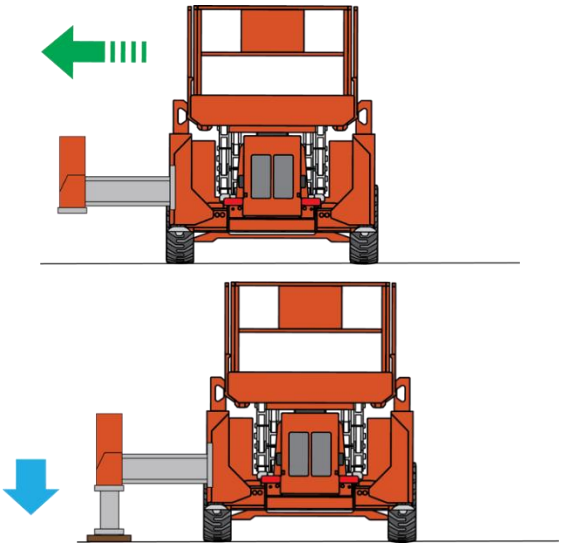

5. Use broad, strong pads (dunnage) under the wheels and stabilisers to ensure stability if the ground is soft or sandy.	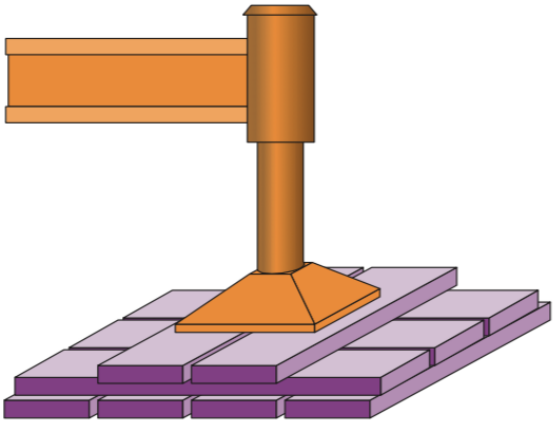
6. Undo any basket and/or boom tie-down straps or locking pins.	

Table 10 – Setting up EWP

Setting up Near Trenches

Do not position the EWP too close to an open trench or excavation as this may cause the trench sidewall to collapse and the EWP to overturn.

Position the EWP at least twice the depth of the excavation away from the edge. For example, if an excavation is 5m deep, position the EWP no closer than 5m from the edge.

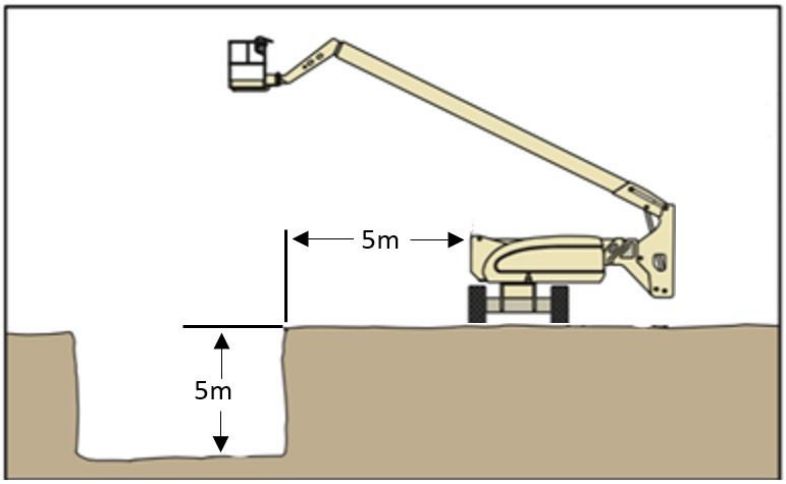

Figure 17 – Setting up near a trench

When setting up a EWP close to buildings you should consider:

- The access and egress.
- Whether the position of the EWP is appropriate.
- Whether the boom is set up to slew away from the building if possible.
- Whether the building needs protection.
- Whether screens are required for fragile and easily damaged parts of the building such as windows.
- Underground services.
- Foundations and structural bearings.
- Underground structures.
- Erosion.
- Un-compacted soil or loose backfill.

Positioning in a Restricted Space

When setting up a EWP in a confined area ensure that you consider:

- The access and egress – will the EWP fit in and out of the space?
- Obstructions and personnel in the area.
- Is a guide needed?
- Can the boom be slewed safely?
- Is there enough room for emergency egress?
- Will there be a build-up of gas or fumes?

Sloping Surface

If the EWP is being set up on a sloping surface, position the outriggers/stabilisers on the lower sloping side first, again making sure the area is clear of personnel before lowering the outriggers/stabilisers. This will allow you to level the platform and then engage the remaining stabilisers.

Figure 18 – Outriggers on slope

PERFORM WORK/TASK

CHECK HAZARD CONTROL MEASURES

Once the EWP has been set up it is important to put any hazard control measures into place.

If any new hazards are identified during the operation, ensure that work is stopped until hazard control measures have been put into place and the risk is at an acceptable level.

Hazard control measures can include:

- Disconnecting the power.
- Adequate lighting to meet illumination requirements.
- Insulated power lines.
- Moving obstructions out of the way of operations.
- Pedestrian and traffic barricades and controls.
- Personal protective equipment (PPE).
- Safety tags on electrical switches/isolators.
- Using safety observer inside exclusion zone.
- Suitable area for set-up with firm and stable ground for EWP operation.
- Installing trench covers on excavations (as required).

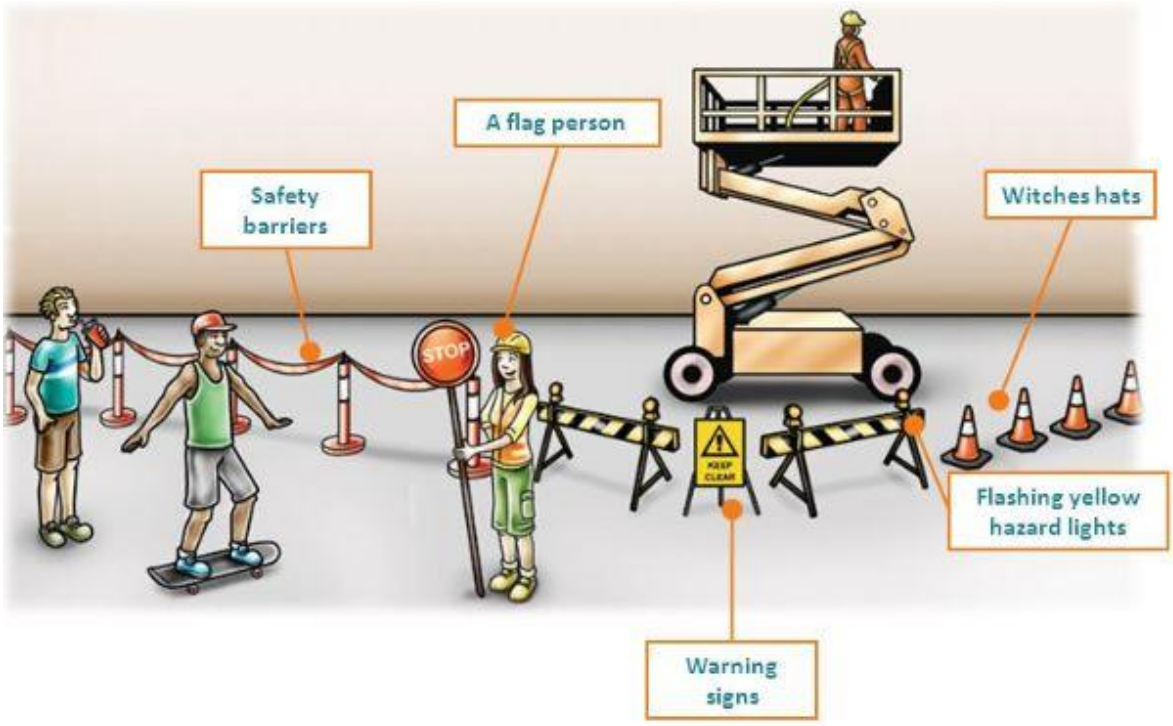

Figure 19– Hazard control examples

TOOLS AND EQUIPMENT

All tools and equipment should be stored or secured in a fixed or removable box or basket.

It is important to store the tools and equipment securely in order to:

- Prevent them from falling from the EWP platform.
- Prevent them from jamming the 'dead man' foot control.
- Prevent them from interfering with safe entry and exit from the EWP.
- Ensure a high standard of housekeeping in the EWP platform.

DO NOT leave tools lying around on the floor of the EWP platform.

OPERATING ON SITE

EWPS are used on site to access and conduct work at heights. The following are general precautions when working on or with a EWP.

Do	Don't
✓ Ensure required Permits (Work at Heights Permit) and Controls are in place before starting work.	× Do not work in an EWP if you are not trained and authorised.
✓ Check overhead clearances.	× Do not operate under powerlines.
✓ Determine the weight of the load and the required height, to ensure the EWP is rated to lift the load.	× Never exceed the SWL/WLL of the EWP.
✓ Prevent unauthorised access by creating an exclusion zone that covers the vehicle plus the area of operation (drop zone).	× Do not work on a slope greater than that recommended by the machine manufacturer.
✓ Wear appropriate and correctly fitted fall safety equipment (harness) that is attached to a suitable anchor point.	× Do not work in a EWP in windy conditions or during an electrical storm.
✓ Inspect equipment to make sure it is suitable to the task and conditions, and is in serviceable condition.	× Do not use damaged or faulty equipment, or lifting equipment that has an unknown capacity.
	× Do not tram the EWP when personnel are in the basket.

Table 11 – Operating on site Do's & Don'ts

POSITION OF LEAST FORWARD STABILITY

The position of least forward stability occurs when the main boom is fully extended at the horizontal position and the tower boom is raised at the maximum angle and fully retracted. As shown in the diagram below, the machine will tip in this position if it is overloaded or not positioned on level ground.

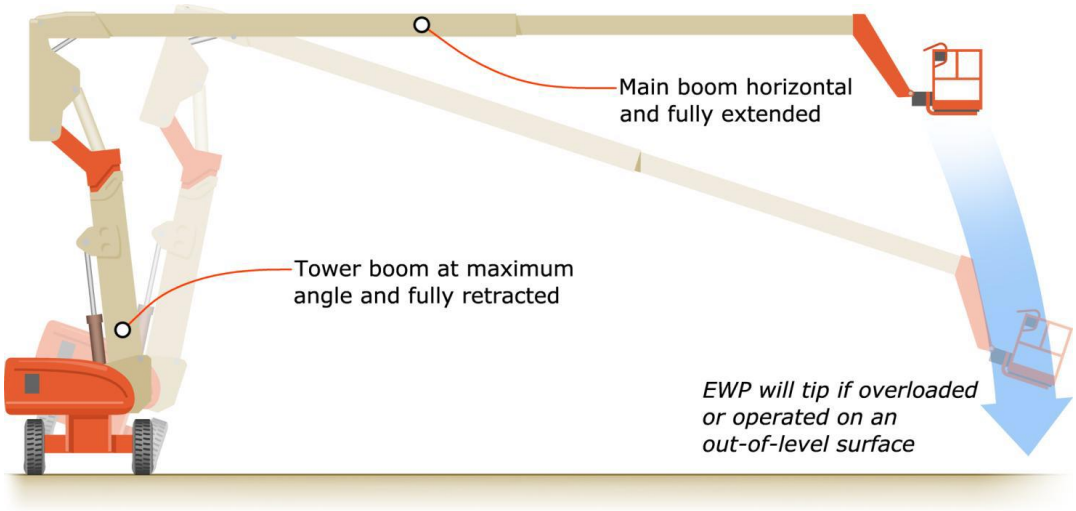

Figure 20– Position of least forward stability

POSITION OF LEAST BACKWARD STABILITY

A position of least backward stability occurs in two instances:

- When the main boom is fully elevated and retracted, with the tower boom fully lowered and retracted. The machine will tip in this position if it is not on level ground.

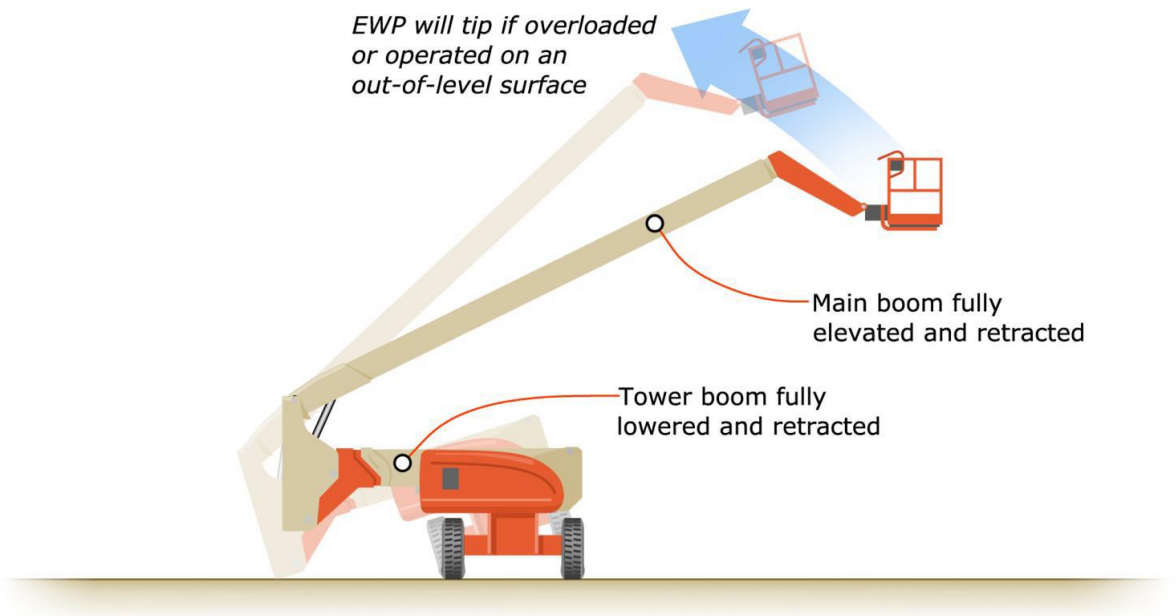

Figure 21– Position of least backward stability 1/2

- When the main boom is fully elevated and retracted, with the tower boom fully elevated and extended. The machine will tip in this position if it is not on level ground.

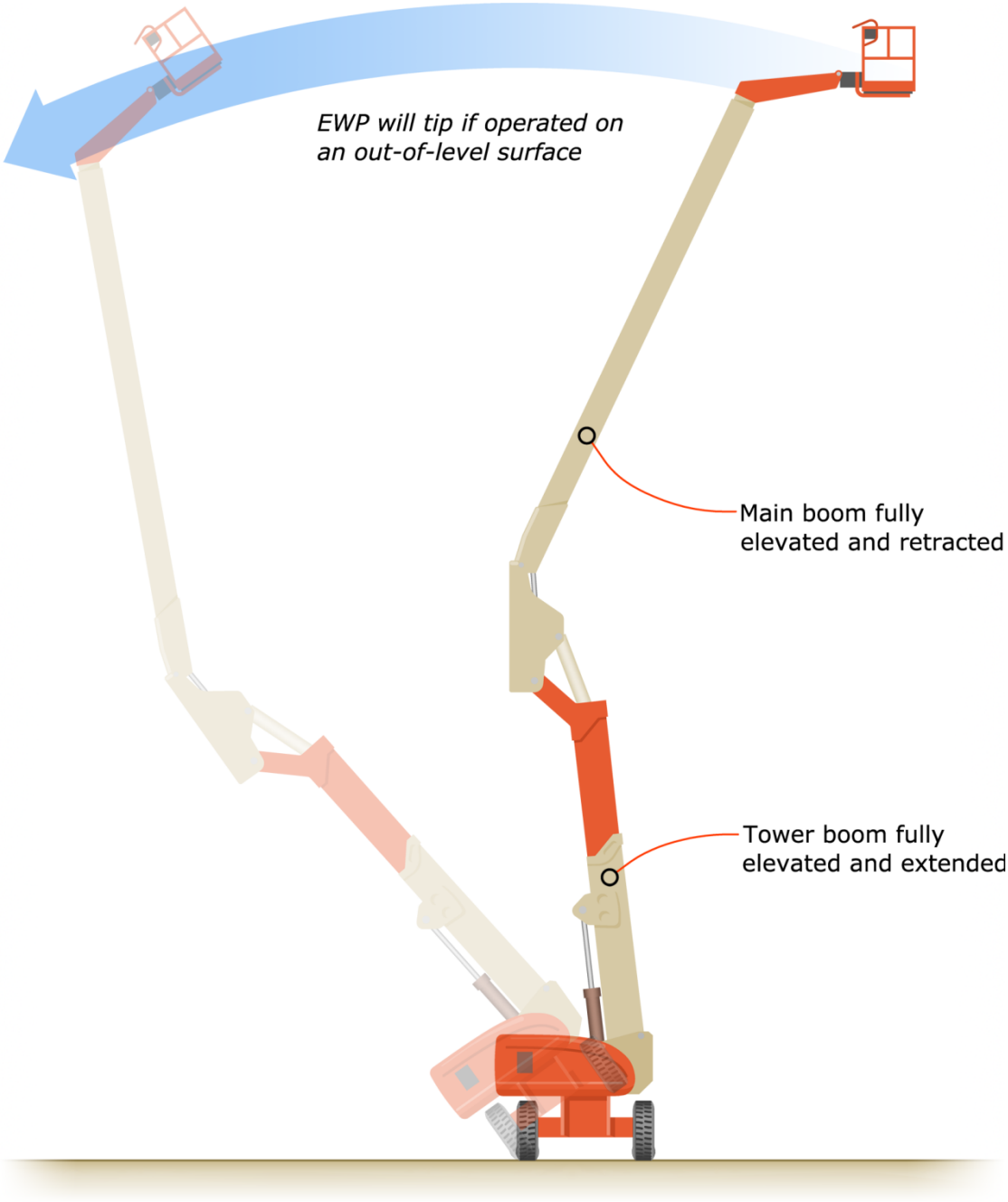

Figure 22– Position of least backward stability 2/2

WORKING IN THE EWP

Observe the following when working with the EWP.

Do	Don't
✓ Enter and exit the EWP only when it has been lowered to the ground.	✗ Do not transfer from the platform to structure unless using double lanyard transfer.
✓ Work with only one other person in the EWP. One person must be a competent, authorised EWP operator.	✗ Do not raise the EWP with unrestrained and/or unauthorised personnel inside.
✓ Check for overhead obstructions.	✗ Do not allow your body to protrude from the platform.
✓ Stop operations if any fault in the equipment is suspected, report immediately.	✗ Do not allow personnel under the raised platform.
✓ Use agreed communication signals.	✗ Do not work in the EWP in windy or stormy conditions.
✓ Use the boom rather than the drive function to manoeuvre the platform close to the work area.	✗ Do not exceed the capacity of the EWP or exceed the boom length or elevation limits set for restricted capacity.
✓ Operate controls smoothly.	✗ Do not use a wedge, or similar, to keep dead man switch engaged.

Table 12 – Working in the EWP Do's & Don'ts

RAISING THE EWP

1. Activate the dead man switch.	
2. Operate lift control lever smoothly and at slow speed to the required elevation.	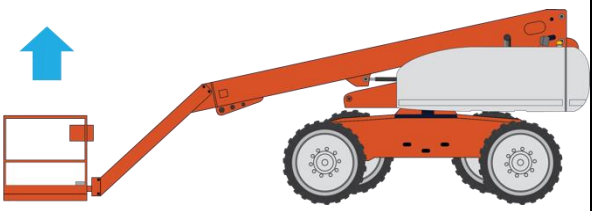
3. Slew the machine to the required position.	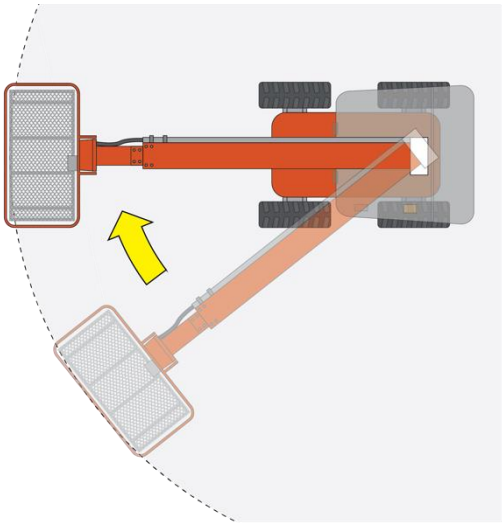

4. Extend the boom slowly to the work area.	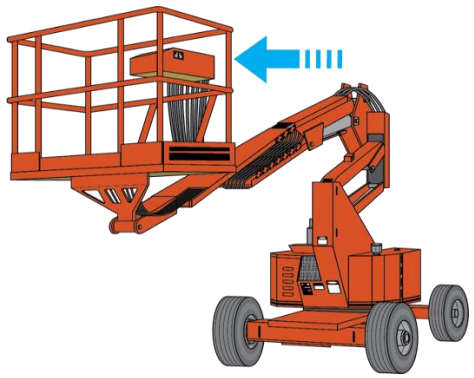
5. Adjust your position as required, slowly and smoothly.	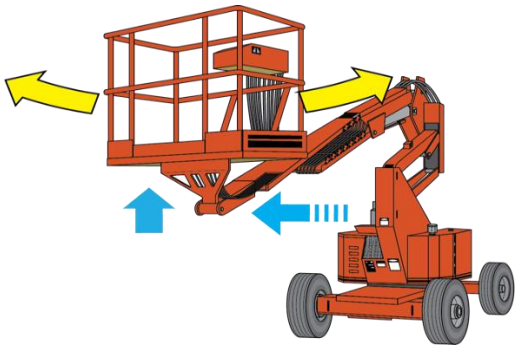
Notes: • Keep the platform level.	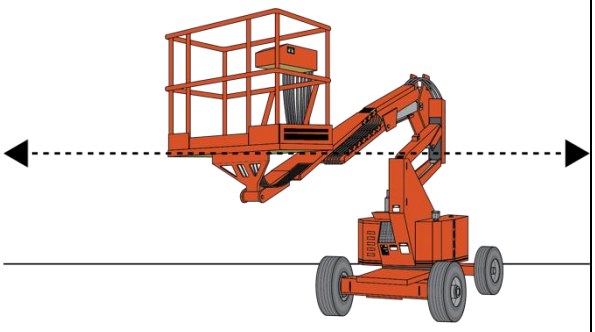
Notes: • The speed of lifting, lowering, slewing and telescoping are set by a speed controller on the dash panel. • There will be a slight delay after you release a control before the function stops.	

Table 13 – Raising the EWP

EMERGENCY PROCEDURES

Any number of things can go wrong while you are operating the EWP. The best thing you can do is know how to deal with these situations when they happen to give you the best chance of avoiding injury.

Unsafe situations could include:

- Need for emergency descent.
- On board fire.
- Contact with Powerlines.
- Collapse of personnel in basket.
- EWP starts tilt.
- Motor cuts out.
- Abnormal noises or movements.
- Warning lights and alarms.
- Platform drops, moves or tilts.

An emergency situation is the only time that it is appropriate to disengage the dead man control to stop the platform from moving. Depending on the kind of emergency there are a range of actions that should be taken. All action should follow your site or organisation emergency response policies and procedures.

If an unsafe incident occurs you will need to:

- Stop work immediately.
- Tell people in the immediate vicinity.
- Try to work out what the problem is.
- Resolve the problem if you can, or lower the EWP platform.
- Record the details of the incident in the logbook.
- Report the problem to an authorised person or as per workplace requirements.
- Stop other people from entering the area as it may be unsafe.

Generally in the case of an emergency you need to tell other people at the site, safety officers, managers, supervisors and emergency services about it. When you are passing on details make sure you clearly explain:

1. That there is an emergency situation.
2. What the emergency is.
3. Where it is or has happened, and if any areas are unsafe.

EMERGENCY DESCENT

Use this procedure if the platform controls become inoperable.

1. Call down to the spotter to lower the basket/platform using the ground controls.	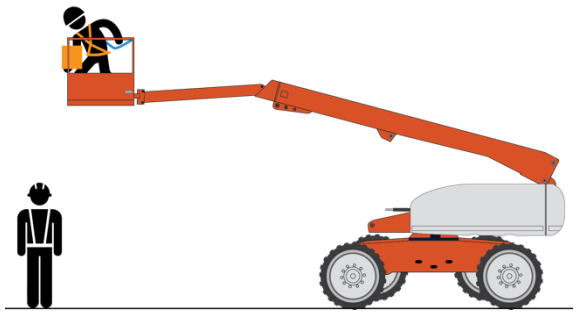
2. If this is not possible use the Emergency Descent Device (EDD) on the EWP (if fitted). **Note:** There are various types of EDD. Yours may look different to the one illustrated here. However, they should all work in the same basic way.	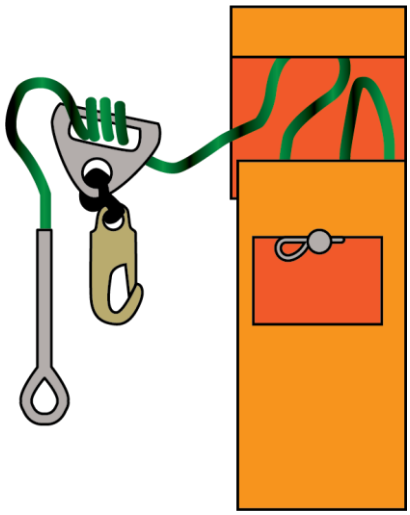
3. Remove the EDD.	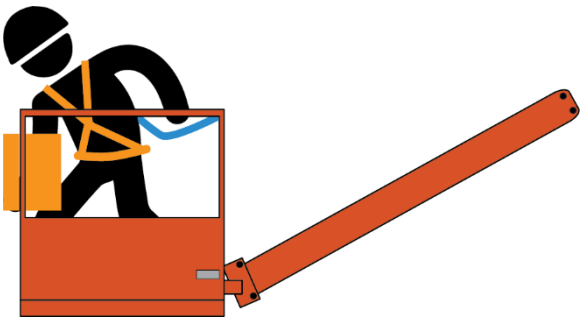

4. Attach EDD to D ring on your safety harness. 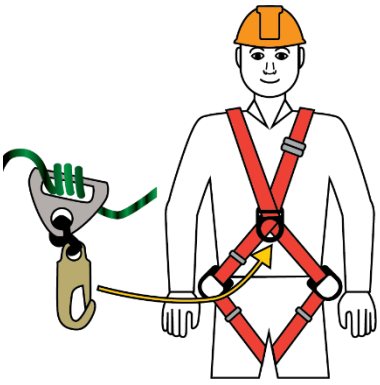	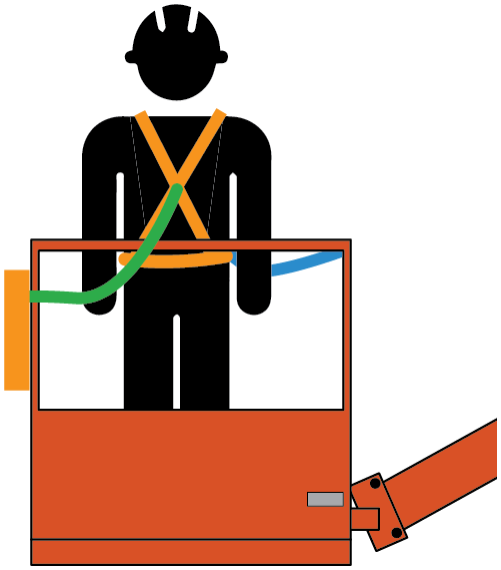
5. Disconnect from the EWP anchor point. 	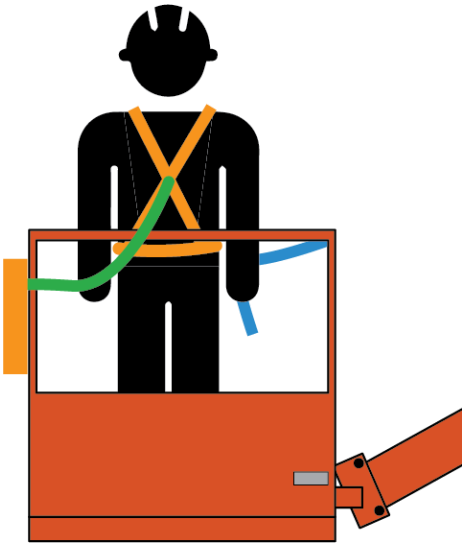
6. Check there is no one beneath the boom and basket.	

7. Climb to the outside of the basket.	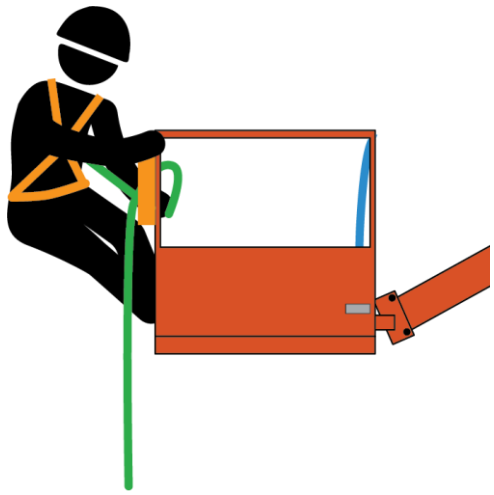
8. Use one hand to hold the rope just below the EDD and the other hand to hold onto the basket, while slowly transferring your weight to the EDD.	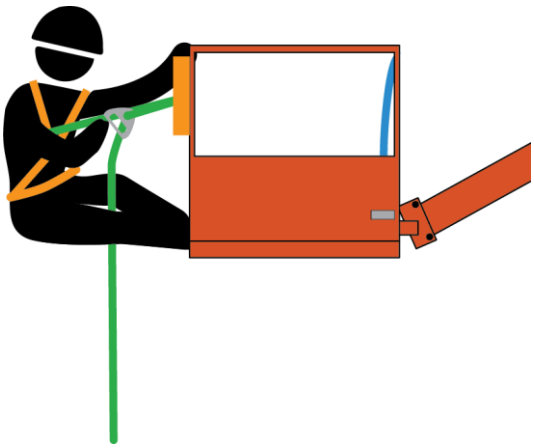
9. Transfer your hand from the basket to the rope above the EDD.	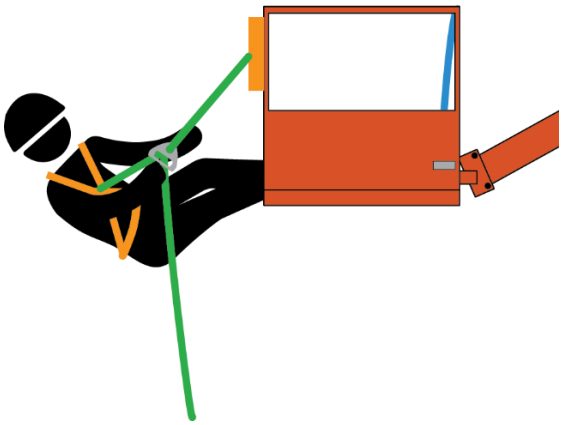

10. Lower yourself by allowing the tail of the EDD rope to run slowly through the fingers of the hand that is below the EDD.

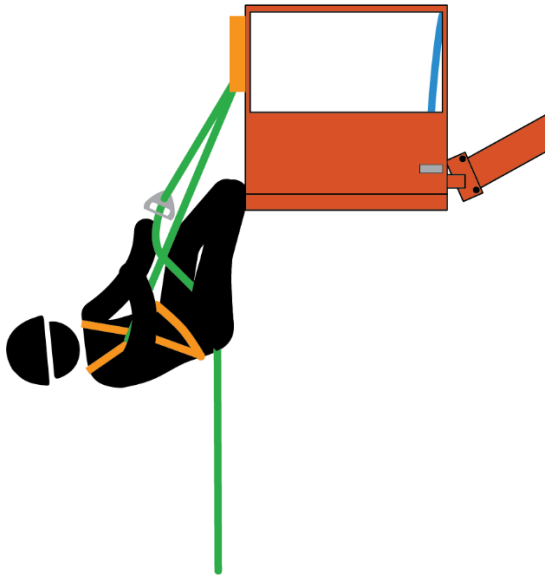

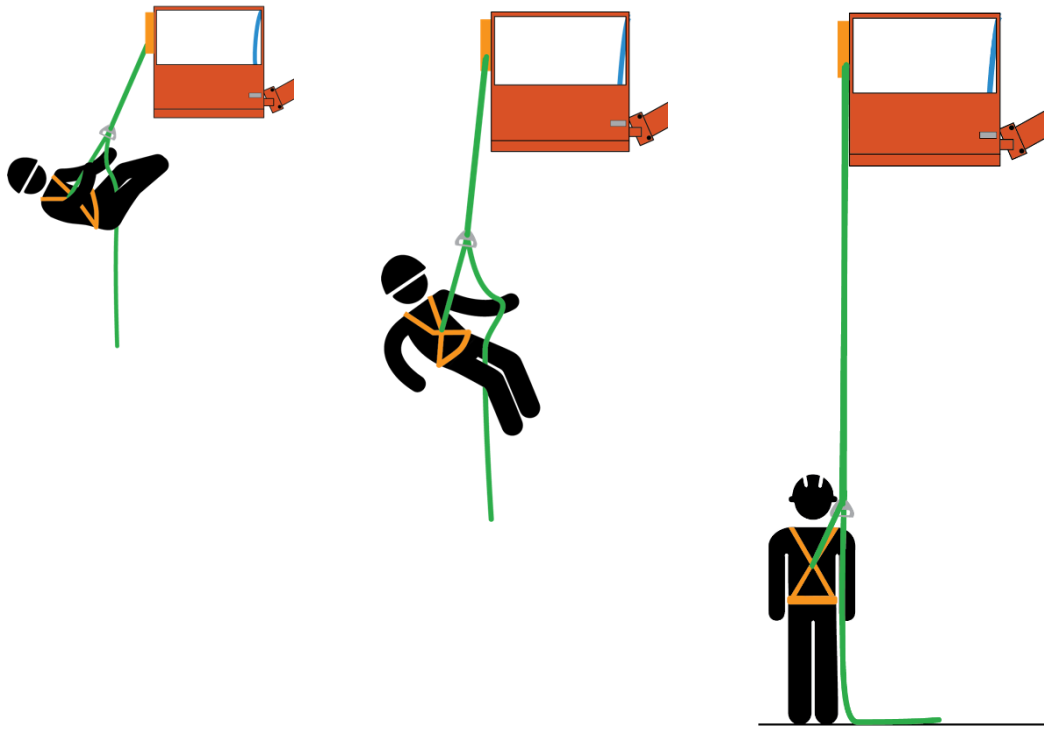

Note: • Increase or decrease your speed of descent by changing the angle at which the tail of the rope is fed into the EDD. • To slow down, hold the tail of the EDD rope up.	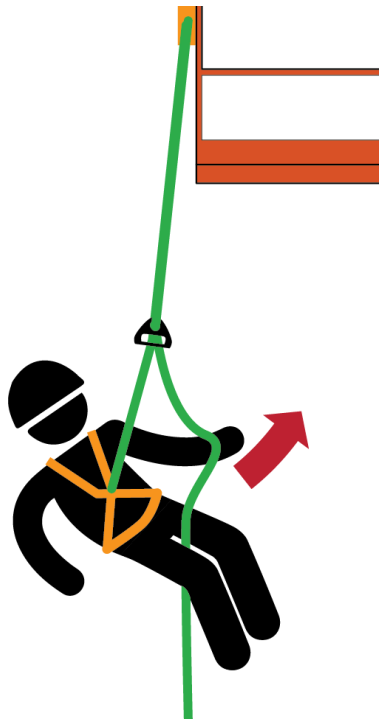
Note: The descent can also be slowed if the spotter on the ground gently pulls on the rope.	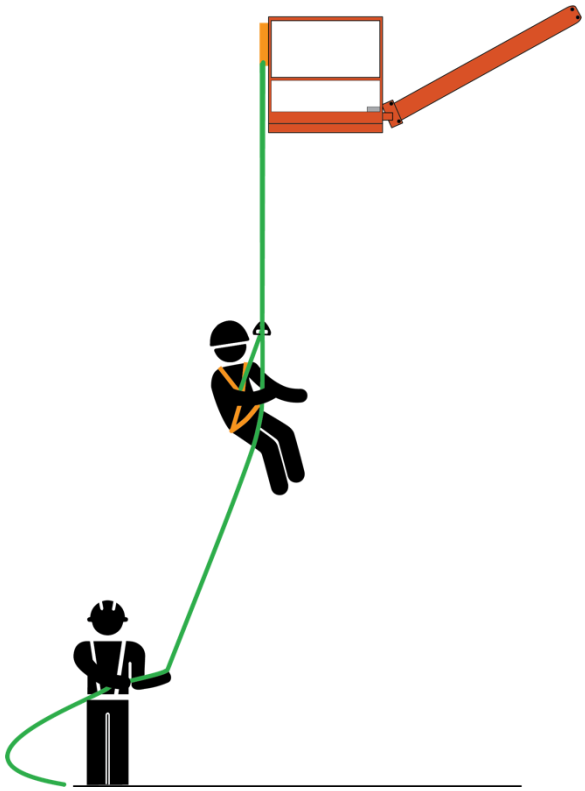

Table 14 – Emergency Decent

ON BOARD FIRE

1. Release the dead man switch.	
2. Hit the emergency stop button to stop operations.	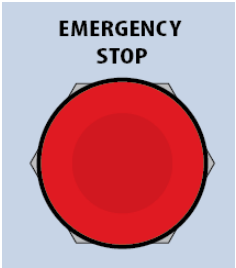
3. Have the spotter switch the machine to ground controls and lower the basket/platform to the ground using the emergency lowering controls.	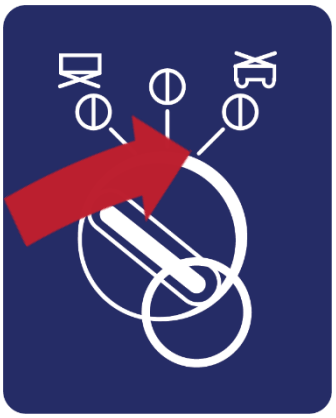
4. The spotter should have initiated the site emergency procedure over the radio on the Mine Channel.	
5. Evacuate the machine in the safest manner possible while avoiding the fire.	

6. If the fire is unable to be extinguished safely, immediately withdraw a safe distance from the machine. 7. Wait for the site emergency response people to arrive.	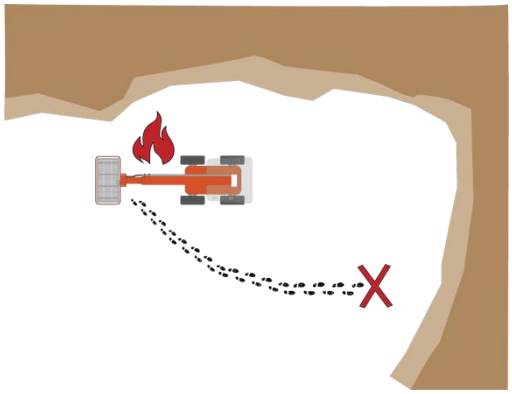

Table 15 – On board fire

Warning

Do not attempt to fight the fire if it is unsafe to do so. Do not ever put yourself at risk.

CONTACT WITH POWERLINES

If the EWP makes contact with electricity or power lines you must take action to limit any further exposure to danger.

1. Warn others in the area.

2. If possible, attempt to break contact with the electricity source or power lines by moving the EWP clear, lowering the EWP boom/s. Before attempting this it is important to consider that the controls may be electrified. If this is the case, do not touch them.

3. If it is not possible to break contact with the electric/power lines, you should stay in the EWP if it is safe to do so. Be careful not to touch any metal parts of the EWP as they may be electrified.

4. If it is unsafe to stay in the EWP (because of fire or some other life threatening situation), you need to check to see if the area around the EWP is clear of any obstacles. If the area is clear you can attempt to jump from the EWP if low enough. DO NOT touch any metal part of the EWP and the ground at the same time. Once on the ground you need to hop or shuffle away from the EWP (keeping both feet together) until you are at least 8m away from the EWP. DO NOT ever walk or run from the EWP as the ground may be electrified.

5. Complete any incident reporting documentation in line with workplace policies and procedures.

6. DO NOT use the EWP again until it has been checked and returned to service.

If unsafe to leave the EWP conduct the following:

1. Stay calm. 2. **DO NOT:** • Climb out of the basket/platform as it may be 'live'. • Touch any of the controls.	
3. The spotter should have initiated the emergency response, which may include arranging to have the power switched off.	
4. Wait for emergency personnel to advise you further.	
5. The spotter should isolate the area and warn personnel to stay clear.	

6. Report the situation to management, Power Company and the safety regulator. 7. Make sure the EWP is checked properly before it is used again.	

Table 16 – Contact with Powerlines

COLLAPSE OF PERSONNEL IN THE BASKET

If you are on the ground and your workmate up in the basket appears to have fainted and has slumped down inside the basket, you should:

- Try to make contact with the person (yell out to them or try to contact them through the communication equipment being used).
- If you get no response, call for first aid or ask someone else to go for first aid assistance.
- Check for hazards in or around the work area, such as power lines or dangerous materials that might have caused asphyxiation.
    - If no hazards are found and the machine is safe, switch it to ground controls and lower the person down.
    - If there is an electrical hazard, do not touch the machine. Call the electrical authority to have the electricity supply shut down and the problem rectified.

EWP STARTS TO TILT TO ONE SIDE

If the EWP begins to tilt:

- Stop work immediately and lower the platform to the ground.
- Get out of the platform, alight from the machine and check out why there is a lean (e.g. packing sinking into a soft or unstable ground surface, or an outrigger hydraulic ram slowly leaking internally).
- If you are not sure, seek advice from a competent person before any attempt is made to elevate the platform again.
- In most cases you will need to relocate the EWP to stable ground.

MOTOR CUTS OUT

If the motor of the EWP cuts out or the controls fail the platform must be lowered to the ground. This can be done by:

- Communicating with personnel who are on the ground to assist in lowering the EWP.
- Using the hydraulic accumulator, if the EWP is fitted with one, which would have enough pressure to slew if needed and then lower the platform.
- Using the battery-operated electro-hydraulic emergency lowering device, if the EWP is fitted with one, which will allow the platform to be lowered even if the motor has cut out.
- If the EWP is not fitted with the above options or they haven't worked, the hydraulic bleed valves, or pump down mechanisms, can be used for emergency lowering.

ABNORMAL NOISES AND MOVEMENTS

If at any time during the operation of the EWP there is an abnormal movement of the boom or abnormal noises you should immediately stop using the EWP, tag it out of service and report the fault to the appropriate person as per site procedures.

If you hear a loud noise or feel vibrations coming from the boom section whilst operating the EWP you should:

- Stop work.
- Notify all people in the immediate vicinity.
- Investigate the cause of the problem.
- Resolve the issue if possible, or lower the EWP platform.
- Tag out the EWP.
- Record the details in the logbook and report it to an authorised person.
- Have an inspection carried out to identify whether damage has occurred.
- Do not use the EWP until any defects have been fixed.

WARNING LIGHTS, CUT-OUTS AND ALARMS

If during the operation of the EWP you observe any defects through warning lights, cut outs or alarms you should:

- Stop work.
- Identify what the problem is, if possible.
- Lower the platform (where applicable).
- Tag the EWP out of service.
- Record the details in the logbook.
- Report the issue to the appropriate person as per site procedures.
- **DO NOT** use the EWP until the defect has been identified and repaired.

PLATFORM DROPS, MOVES OR TILTS

If during the operations of the EWP you feel the EWP platform drop, move or tilt you should:

- Cease all work with the EWP immediately.
- Tell others in the immediate area what you are doing.
- Inspect the EWP for defects and check the set up positioning – to see if the EWP has shifted.
- Lower the platform to the ground.
- Tag the EWP out of service.
- Record the details in the logbook and report it to an authorised person.
- Have an inspection carried out to identify whether damage has occurred.

EWP RECOVERY

Should the EWP become unsafe to move under its own power due to a mechanical fault, immediately contact your supervisor. The supervisor will then take the appropriate actions to ensure that the machine is recovered in the correct and safe manner.

PARKING EWP

8. Park in a designated parking area.	
9. Check the area below the platform is clear before lowering.	
10. Lower the platform into the down position. **Note:** • Ensure boom is retracted, lowered, stowed and secured in accordance with manufacture and site requirements. • Ensure outriggers are retracted.	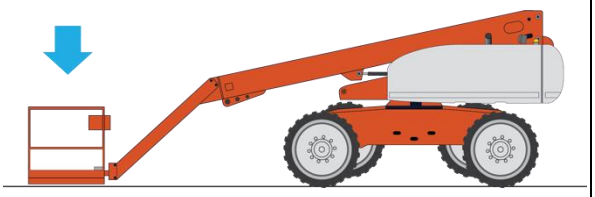
11. Apply the brake. 12. Turn engine off. 13. Isolate the EWP. **Note:** • Shutdown as per manufacture and site requirements.	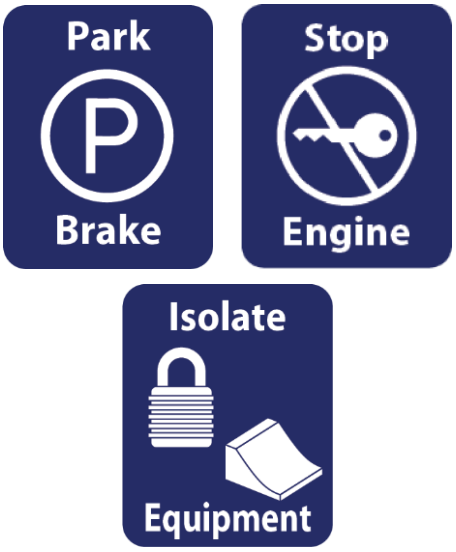

14. Perform housekeeping, e.g. remove tools and materials from the EWP and store in designated areas, dispose of waste according to site procedures.	
15. Conduct a walk around inspection and report defects.	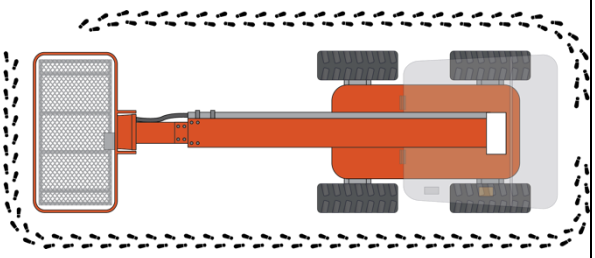

Table 17 – Parking the EWP

POST OPERATIONAL CHECKS

Check the machine for breakages, other damage or leaks. More specifically, you need to check:

- All the hydraulic arms, to make sure they have not been damaged or bent during the machine's operation.
- The boom, for dents or cracks in its welds and joints.
- The slew ring, for any bending or other damage.
- The basket, to make sure it is in good working order and has not been damaged.
- The outriggers/stabilisers, to make sure they are in good order.
- All safety devices, to make sure that they are intact and operational.

Report any faults or damage to your supervisor/manager immediately, make sure they are noted in the log for corrective action and, where necessary, make sure warning tags are attached to the machine.

PACK UP

After use of the EWP ensure:

- All equipment is:
  - Disconnected
  - Cleaned
  - Inspected
  - Returned
- Relevant motion brakes and locks are applied as per manufacturer and site requirements.
- EWP is stored correctly – charging, locks etc
- Any dunnage, stabilisers plates etc. are removed, stored and secured in accordance with manufacturer and site requirements.
- All waste materials removed and disposed of correctly.
- All permits and documentation are completed.
- Area is cleaned and refurbished

Figure 23 – Danger and Out of Service Tags